T10FH

Torque Flange

Non-rotating version

Rotating version

Special features

- **Nominal (rated) torques: 100 kNVm, 130 kNVm, 150 kNVm, 200 kNVm, 250 kNVm, 300 kNVm**
- **Nominal (rated) speeds from 2,000 rpm to 3,000 rpm**
- **Short design**
- **Version for rotating and non-rotating use**
- **Without bearings or slip rings**
- **Options:**
  magnetic speed measuring system, 180 pulses/revolution;
  PTB calibration certificate per DIN 51309 or EA-10/14: class 0.5

Data sheet

Installation example

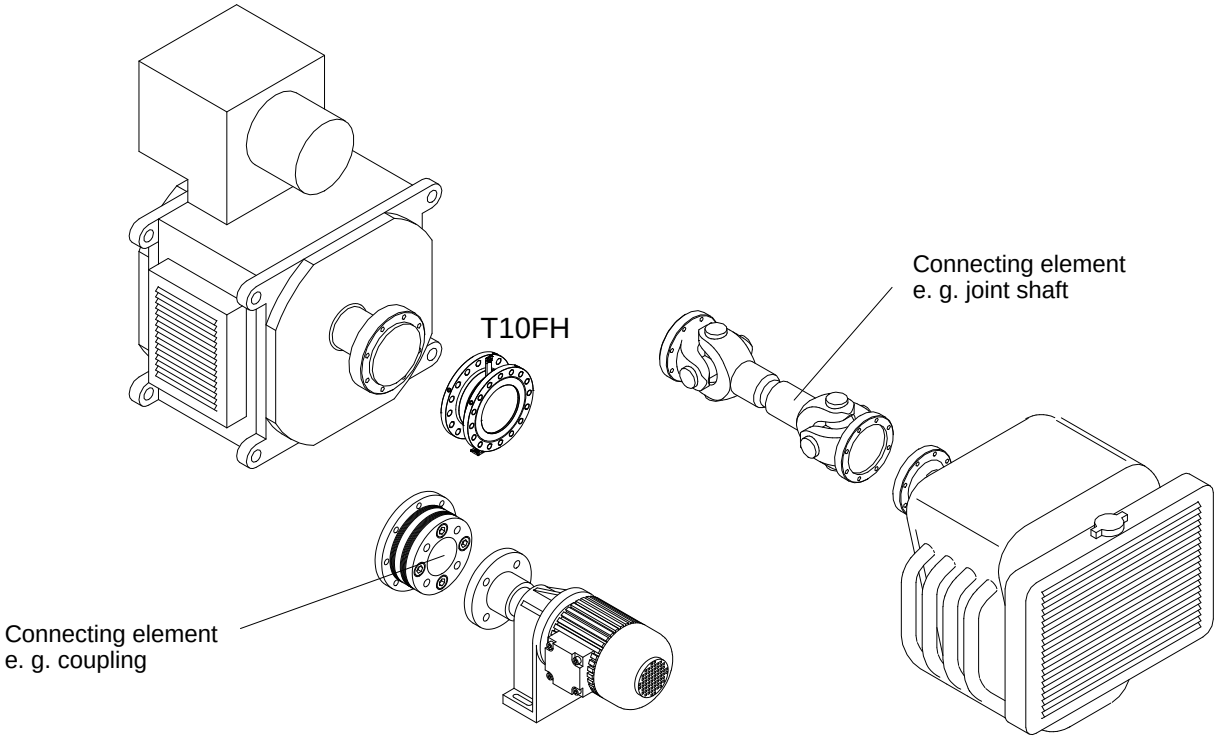

Specifications

Type		T10FH (rotating); option 2, code L					
Accuracy class		0.1					
Torque measuring system							
Nominal (rated) torque M_{nom}	kN·m	100	130	150	200	250	300
for reference only	kft-lb	73.8	95.9	110.6	147.5	184.4	221.3
Nominal (rated) sensitivity (range between torque = zero and nominal (rated) torque)							
Frequency output	kHz	5					
Voltage output	V	±10					
Sensitivity tolerance (deviation of the actual output value at M_{nom} of nominal (rated) sensitivity)							
Frequency output							
in conjunction with HBM test report	%	±0.25			±0.4		
in conjunction with PTB calibration certificate per DIN 51309 or EA-10/14	%	±0.1			±0.1		
Voltage output							
in conjunction with HBM test report	%	±0.35			±0.5		
in conjunction with PTB calibration certificate per DIN 51309 or EA-10/14	%	±0.2			±0.2		
Output signal at torque = zero							
Frequency output	kHz	10					
Voltage output	V	0					
Nominal (rated) output signal							
Frequency output							
with positive nominal (rated) torque	kHz	15 (±5 V symmetric)[1] / 15 (12 V asymmetric)					
with negative nominal (rated) torque	kHz	5 (±5 V symmetric)[1] / 5 (12 V asymmetric)					
Voltage output							
with positive nominal (rated) torque	V	+10					
with negative nominal (rated) torque	V	−10					
Load resistance							
Frequency output	kΩ	> 2					
Voltage output	kΩ	> 5					
Long-term drift over 48 h							
Voltage output	mV	±3					
Measurement frequency range							
Voltage output	Hz	0 ... 1000 (−3 dB)					
Group delay time							
Frequency output	ms	0.15					
Voltage output	ms	0.9					
Residual ripple							
related to nominal (rated) sensitivity	mV	40 (peak-to-peak)					
Temperature influence per 10 K in the nominal temperature range							
on the output signal, related to the actual value of signal span							
Frequency output	%	±0.1					
Voltage output	%	±0.2					
on the zero signal, related to the nom. sensitivity							
Frequency output	%	±0.05					
Voltage output	%	±0.15					
Max. modulation range[2]							
Frequency output	kHz	4 ... 16					
Voltage output	V	−10.5 ... +10.5 (typ. ±11)					
Power supply							
Nominal (rated) supply voltage (protective low voltage)	V (DC)	18 ... 30					
Current consumption							
in measuring mode	A	< 0.9					
in start-up mode	A	< 2					
Nominal (rated) power consumption	W	< 12					

1) RS 422 complementary signals; factory settings

2) Output signal range with a repeatable relationship between torque and output signal.

Specifications

Nominal (rated) torque M_{nom} for reference only	kN·m kft-lb	100 73.8	130 95.9	150 110.6	200 147.5	250 184.4	300 221.3
Linearity deviation including hysteresis, related to the nominal (rated) sensitivity Frequency output Voltage output	 % %	 ±0.1 ±0.1					
Rel. standard deviation of the reproducibility, per DIN 1319, by reference to variation of the output signal Frequency output Voltage output	 % %	 ±0.02 ±0.03					
Shunt signal		approx. 50 % of M_{nom}; value given to the identification plate					
Tolerance of shunt signal related to the nominal (rated) sensitivity in conjunction with HBM test report in conjunction with PTB calibration certificate per DIN 51309 or EA-10/14	 % %	 ±0.13 ±0.05			 ±0.2 ±0.05		
Speed measuring system							
Measuring system		Magnetic field dependent resistor and gear ring					
Mechanical increments (pulses per revolution)	Number	180					
Output signal	V	5 symmetric[3]; 2 x 180 square wave signals approx. 90° phase shifted					
Minimum speed for sufficient pulse stability	rpm	> 2					
Load resistance	kΩ	> 5					
Group delay time	µs	< 5					
Hysteresis of reversing the direction of rotation with relative vibrations between rotor and stator Torsional rotor vibrations	 degree	 10					
Max. permissible static eccentricity of the rotor (radially) relative to stator center without speed measuring system with speed measuring system	 mm mm	 ±2 ±1					
Max. permissible axial displacement between rotor and stator without speed measuring system with speed measuring system	 mm mm	 ±3 ±1.5					

3) RS 422 complementary signals

Specifications

Type		T10FH (non-rotating); option 2, code N					
Accuracy class		0.1					
Torque measuring system							
Nominal (rated) torque M_{nom} for reference only	kN·m kft-lb	100 73.8	130 95.9	150 110.6	200 147.5	250 184.4	300 221.3
Nominal (rated) sensitivity at M_{nom} (nominal (rated) signal range between torque= zero and nominal (rated) torque)	mV/V	1.1 ... 1.9 (The sensitivity is specified on the identification plate)					
Sensitivity tolerance (deviation of the actual output value at M_{nom} of nominal (rated) sensitivity) in conjunction with HBM test report	%	±0.25			±0.4		
in conjunction with PTB calibration certificate per DIN 51309 or EA-10/14	%	±0.1			±0.1		
Temperature influence per 10 K in the nominal temperature range							
on the output signal, related to the actual value of signal span	%	±0.1					
on the zero signal, related to the nom. sensitivity	%	±0.05					
Linearity deviation including hysteresis, related to the nominal (rated) sensitivity	%	±0.1					
Rel. standard deviation of the reproducibility, per DIN 1319, relative to variation of the output signal	%	±0.02					
Input resistance at reference temperature	Ω	1550±100					
Output resistance at reference temperature	Ω	1300 ... 1500					
Reference excitation voltage	V	5					
Operating range of the excitation voltage	V	2.5 ... 12					
Transducer identification	–	TEDS per IEEE 1451.4					

Specifications

General data							
Nominal (rated) torque M_{nom}	kN·m	100	130	150	200	250	300
for reference only	kft-lb	73.8	95.9	110.6	147.5	184.4	221.3
EMC							
EME (Emission per EN61326−1, table 4)							
RFI field strength	−	Class B					
Immunity from interference (EN61326-1, table A.1)							
Electromagnetic field AM	V/m	10					
Magnetic field	A/m	30					
ESD							
Contact discharge	kV	4					
Air discharge	kV	8					
Burst	kV	1					
Surge	kV	1					
Line-conducted disturbance (AM)	V	3					
Degree of protection per EN 60529	−	IP 54					
Nominal temperature range	°C [°F]	+10...+60 [+50...+140]					
Reference temperature	°C [°F]	+23 [73.4]					
Service temperature range	°C [°F]	+10...+60 [+50...+140]					
Storage temperature range	°C [°F]	−20...+70 [−4...+158]					
Mechanical shock; test severity level to DIN IEC 60068−2−27; IEC 68−2−29−1987							
Number of impacts	n	1000					
Duration	ms	3					
Acceleration	m/s^2	650					
Vibrational stress; test severity level to DIN IEC 60068−2−6; IEC 68−2−6−1982							
Frequency range	Hz	5 ... 65					
Duration	h	1.5					
Acceleration	m/s^2	50					
Nominal (rated) speed*)	rpm	3000			2000		
Load limits 1)							
Limit torque	kN·m	200			400		
Breaking torque	kN·m	> 300			> 600		
Axial limit force	kN	230			290		
Lateral force limit	kN	110			240		
Bending limit moment	kN·m	22			35		
Oscillation bandwidth per DIN 50100 (peak-to-peak)	kN·m	200			400		
upper maximum torque	kN·m	+150			+300		
lower maximum torque	kN·m	−150			−300		

*) Only with option 2, code L

1) Each type of irregular stress can only be permitted with its given static load limit (bending moment, lateral or axial load, exceeding the nominal (rated) torque) if none of the others can occur. Otherwise the limit values must be reduced. If for instance 30 % of the bending limit moment and also 30 % of the lateral limit force are present, only 40 % of the axial limit force are permitted, provided that the nominal (rated) torque is not exceeded. With the permitted bending moments, axial, and lateral limit forces, measuring errors of about 1 % of the nominal (rated) torque can occur. If the nominal (rated) torque is exceeded, ensure that the maximum modulation range of the signal output electronics is being observed.

Mechanical values							
Nominal (rated) torque M_{nom} for reference only	kN·m kft-lb	100 73.8	130 95.9	150 110.6	200 147.5	250 184.4	300 221.3
Torsional stiffness c_T	kN·m/rad	84000			169500		
Axial stiffness c_a	kN/mm	1250			2850		
Radial stiffness c_r	kN/mm	2500			4300		
Stiffness with bending moment about a radial axis c_b	kN·m/rad	17500			49600		
Maximum deflection at axial limit force	mm	< 0.5					
Additional max. concentricity error at lateral limit force	mm	< 0.1					
Additional plane-parallel deviation at bending limit moment	mm	< 1					
Balance quality-level to DIN ISO 1940[1)]		G 6.3					
Max. limits for relative shaft vibration (peak-to-peak)[1)2)] Wave oscillations in the area of the connection flanges acc. to ISO 7919−3							
Normal mode (continuous operation)	µm	$s_{(p-p)} = \frac{9000}{\sqrt{n}}$ (n in rpm)					
Start and Stop mode/resonance ranges (temporary)	µm	$s_{(p-p)} = \frac{13200}{\sqrt{n}}$ (n in rpm)					
Mass moment of inertia of the rotor L_v (about axis of rotation)	kg·m²	2			5.2		
Proportional mass moment of inertia for transmitter side, approx.	%	55			53		
Weight, approx. Rotor	kg	84			148		
Stator[1)]	kg	1.4					

1) Rotating; option 2, code L
2) The impact of radial run-out deviations, eccentricity, defects of form, notches, marks, local residual magnetism, structural variations or material anomalies needs to be taken into account and isolated from the actual wave oscillation.

Supplementary information for classification through PTB calibration certificate per DIN 51309 or EA-10/14		
Class		0.5
Rel. zero error (zero signal return)	%	$< \pm 0.125$ (typically < 0.05)
Repeatability $0.2 \cdot M_{nom}$ to M_{nom} (rel. repeatability error without rotation)	%	< 0.25 (typically < 0.125)
Reproducibility $0.2 \cdot M_{nom}$ to M_{nom} (rel. reproducibility error with rotation)	%	< 0.5 (typically < 0.25)
Relative reversibility error ($0.2 \cdot M_{nom}$ to M_{nom})	%	< 0.63 (typically < 0.5)

Dimensions Rotor T10FH rotating; option 2, code L (in mm; 1 mm=0.03937 inches)

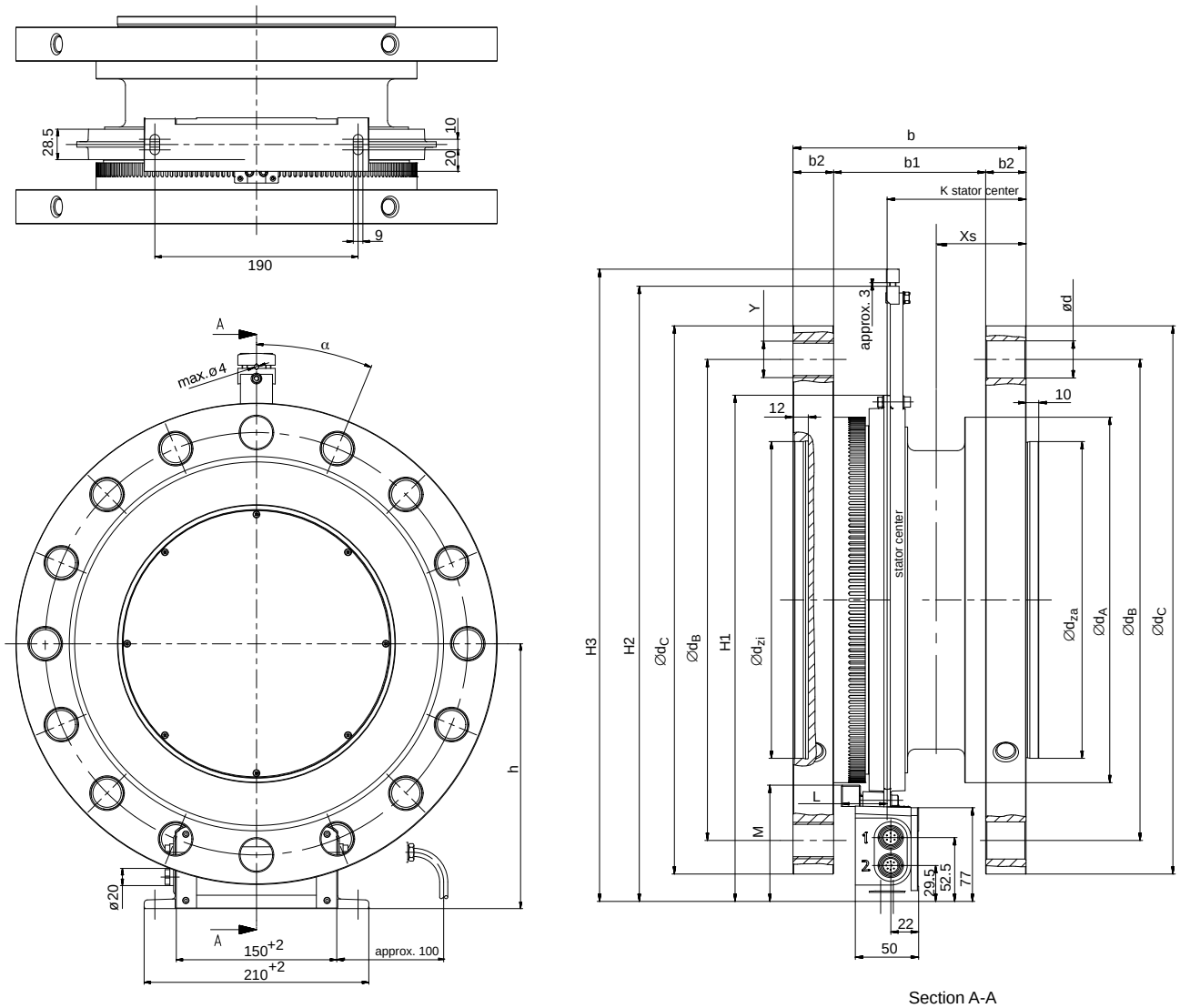

Section A-A
(Partial section: Flange bore and centering)

x_S = measuring plane (center of point of application)

Measuring range (kN·m)	Dimensions in mm												
	h	H1	H2	H3	b	b1	b2	Ød	Ød$_A$	Ød$_B$	Ød$_C$	Ød$_{zah6}$	Ød$_{zi}^{H7}$
100 130 150	248	416	505	520	184	120	32	30.5	300	395	450	260	260
200 250 300	280	473	563	577	230	150	40	37	370	470	540	345	345

Measuring range (kN·m)	Dimensions in mm					
	K	L	M	x_S	α	Y
100 130 150	109.75	36.1	95.5	71	22.5° 16x22.5°=360°	M30
200 250 300	140	36.1	103	98	20° 18x20°=360°	M36

Dimensions Rotor T10FH non-rotating; option 2, code N (in mm; 1 mm=0.03937 inches)

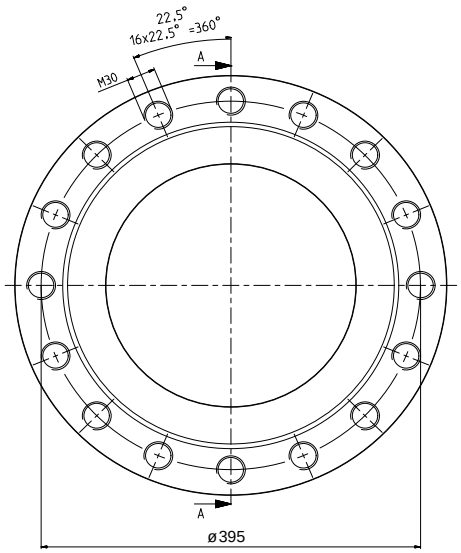

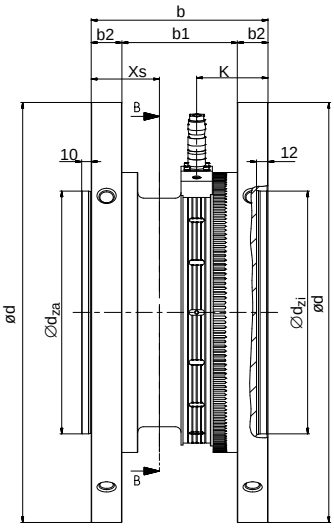

Section A-A
(Partial section: Internal centering
x_S = measuring plane (center of point of application)

Flange illustration for measuring range 100 kN·m to 150 kN·m

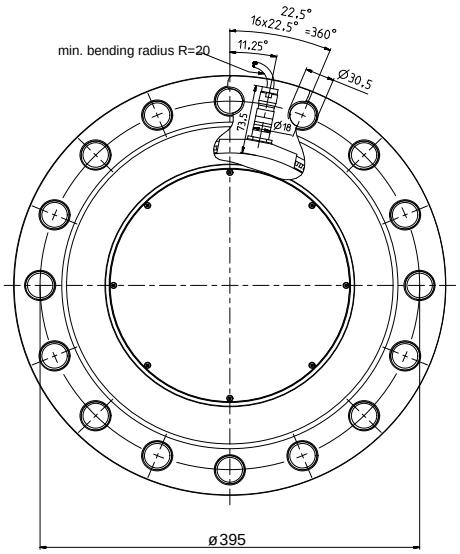

Section B-B
(Partial section: Connector)

Flange illustration for measuring range of 200 kN·m to 300 kN·m

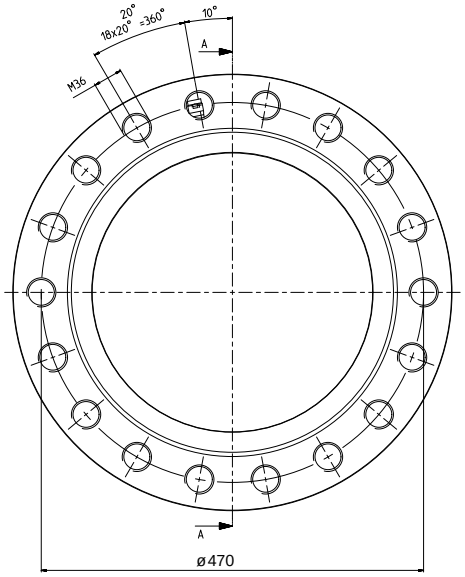

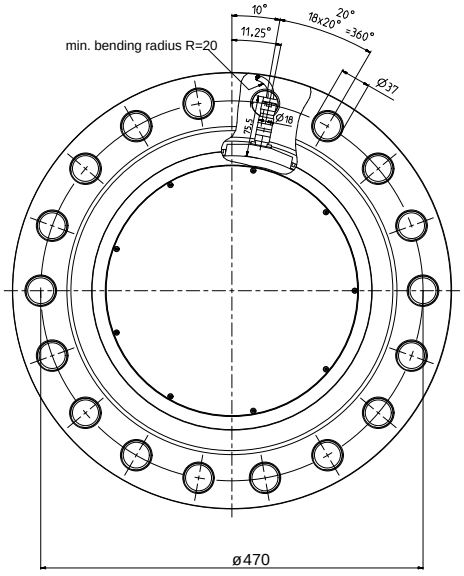

Section B-B
(Partial section: Connector)

Measuring range (kN·m)	Dimensions in mm							
	b	b1	b2	Ød	$Ød_{zah6}$	$Ød_{zi}^{H7}$	K	x_S
100 130 150	184	120	32	450	260	260	74.3	71
200 250 300	230	150	40	540	345	345	90	98

Flatness and concentricity tolerances

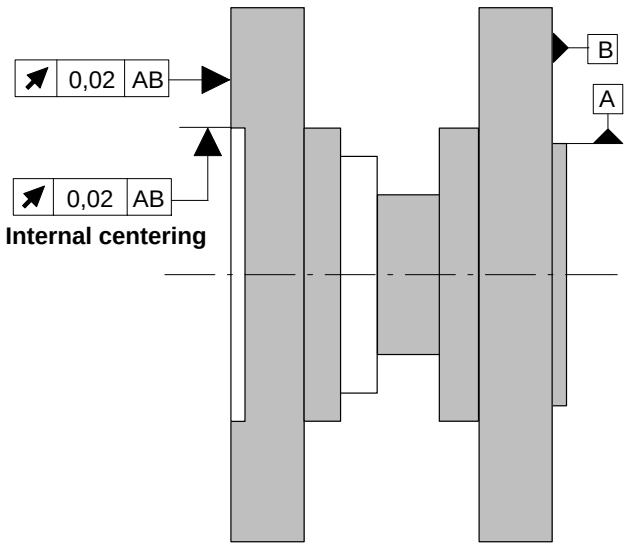

Hardness 46 ... 54 HRC

0.8 Surface quality of in-plane and concentric surfaces (A, B and AB)

Area free of metal parts

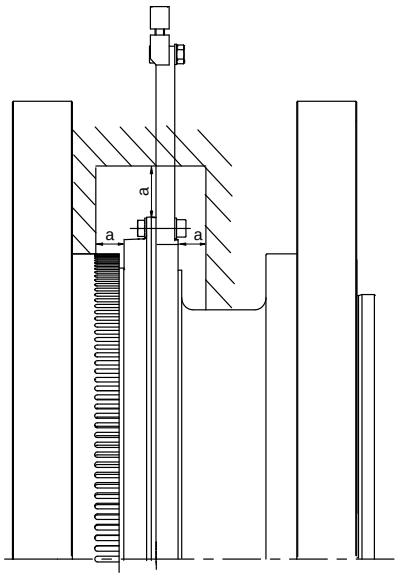

Mounting dimensions	
Measuring range (kN·m)	**Area free of metal parts"a" (mm)**
100 ... 300	20

Screw fitting of the rotor

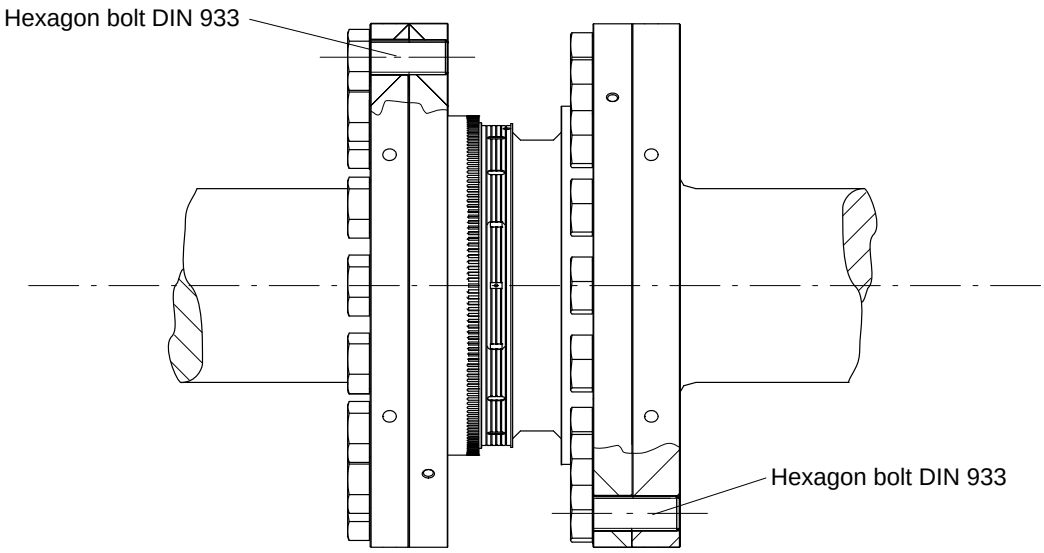

Measuring range (kN·m)	Fastening bolts[1)]	Fastening bolts class	Maximum number of bolts per flange	Prescribed tightening torque (N·m)
100 130 150	M30	12.9	16	2450
200 250 300	M36		18	4250

1) DIN 933; bk/oiled/μ_{tot}=0.125

Order number

Code	Option 1: Measuring range up to
100R	100 kN·m
130R	130 kN·m
150R	150 kN·m
200R	200 kN·m
250R	250 kN·m
300R	300 kN·m

Code	Option 2: Nominal speed
N	Non-rotating
L	Nominal speed depending on meas. range 2000 rpm to 3000 rpm

Code	Option 3: Electrical configuration
PNJ	Output signal mV/V, depending on meas. range; Nominal (rated) sensitivity 1.1 ... 1.9 mV/V
SU2	Output signal 10 kHz ±5 kHz and ±10 V; Supply voltage 18 ... 30 V DC

Code	Option 4: Accuracy
S	Linearity deviation incl. hysteresis < 0.1; Standard sensitivity tolerance*)
K	PTB calibration certificate per DIN 51309 or EA-10/14: class 0.5, clockwise- and counterclockwise torque; sensitivity tolerance 0.1 %
W	PTB calibration certificate per DIN 51309 or EA-10/14: class 0.5, clockwise- and counterclockwise torque plus specification of remanence value; sensitivity tolerance 0.1 %

Code	Option 5: Rot. speed measuring system
0	Without rot. speed measuring system
1	With rot. speed measuring system; 180 pulses/revolution

Code	Option 6: Customized modification
S	No Customized modification

*) Option 1, Code 100R ... 150R: 0.25 %
Option 1, Code 200R ... 300R: 0.4 %

Order no.:

K-T10FH – □□□□ – □ – □□□ – □ – □ – □

Ordering example:

K-T10FH – 1 5 0 R – L – S U 2 – S – O – S

Accessories, to be ordered separately:

Item	Order-No.
Ready made connecting cables	
Torque (rotating); option 2, code L	
Connecting cable torque, Binder 423 7-pole − D-Sub 15-pole, 6 m	1−KAB149−6
Connecting cable torque, Binder 423 − free ends, 6 m	1−KAB153−6
Torque (non-rotating); option 2, code N	
Connecting cable torque, Binder 423 − free ends, 6 m	1−KAB139A−6
Rotational speed	
Connecting cable rot. speed, Binder 423 8-pole − D-Sub 15-pole, 6 m	1−KAB150−6
Connecting cable rot. speed, Binder 423 8-pole − free ends, 6 m	1−KAB154−6
Male/female cable connectors	
Torque	
423G−7S cable socket, 7-pole, straight cable entry, for torque output	3−3101.0247
423W−7S cable socket, 7-pole, 90° cable entry, for torque output	3−3312.0281
Rotational speed	
423G−8S cable socket, 8-pole, straight cable entry, for speed output	3−3312.0120
423W−8S cable socket, 8-pole, 90° cable entry, for speed output	3−3312.0282
Connecting cable, by the meter	
Kab8/00−2/2/2	4−3301.0071

Hottinger Baldwin Messtechnik GmbH
Im Tiefen See 45 · 64293 Darmstadt · Germany
Tel. +49 6151 803-0 · Fax +49 6151 803-9100
Email: info@hbm.com · www.hbm.com

measure and predict with confidence

B2031-5.0 en HBM: public