Data sheet

GEN series GEN3i

Transient Recorder and Data Acquisition System

Special features

- **Built-in PC**
- **Robust and portable**
- **Three slots for any mix of acquisition cards**
- **Up to 96 analog channels**
- **200 MB/s continuous streaming**
- **Remote use from external PC**
- **Perception Advanced software for review and analysis**
- **Power failure data security**
- **Wake-on-LAN**
- **Master/Slave synchronization**
- **PTP time synchronization**
- **IRIG/GPS time synchronization (option)**
- **1 Gbit optical Ethernet (option)**
- **10 Gbit optical or electrical Ethernet with 400 MB/s continuous streaming (option)**

The GEN3i is a versatile portable data recorder. In addition, it provides all the features expected from a transient recorder. The hardware combines a full-featured, low-power, Intel Core™ i5 3rd generation Windows® PC with a large, high-resolution, touch screen and a robust three-slot acquisition unit. The GEN3i power failure data security feature enables recording file integrity during continuous recording minimizing data loss upon sudden power loss. As soon as power restores, GEN3i automatically reboots and resumes the recording with the setup used prior to power loss.

GEN3i features five different Windows® languages and eight different Perception languages pre-installed.
Designed for operation in the field as well as in the laboratory, GEN3i features a unique, Instrument Panel touch interface, with one-touch access to all features for daily operation. In addition, GEN3i includes the Perception Advanced for post-processing. With a single touch, the data recorder turns into a dedicated instrument for analysis and sophisticated reporting. If third party analysis is preferred, up to 20 export formats are available including MATLAB, DIAdem, MDF4/ASAM, UFF58 and more.

Block Diagram

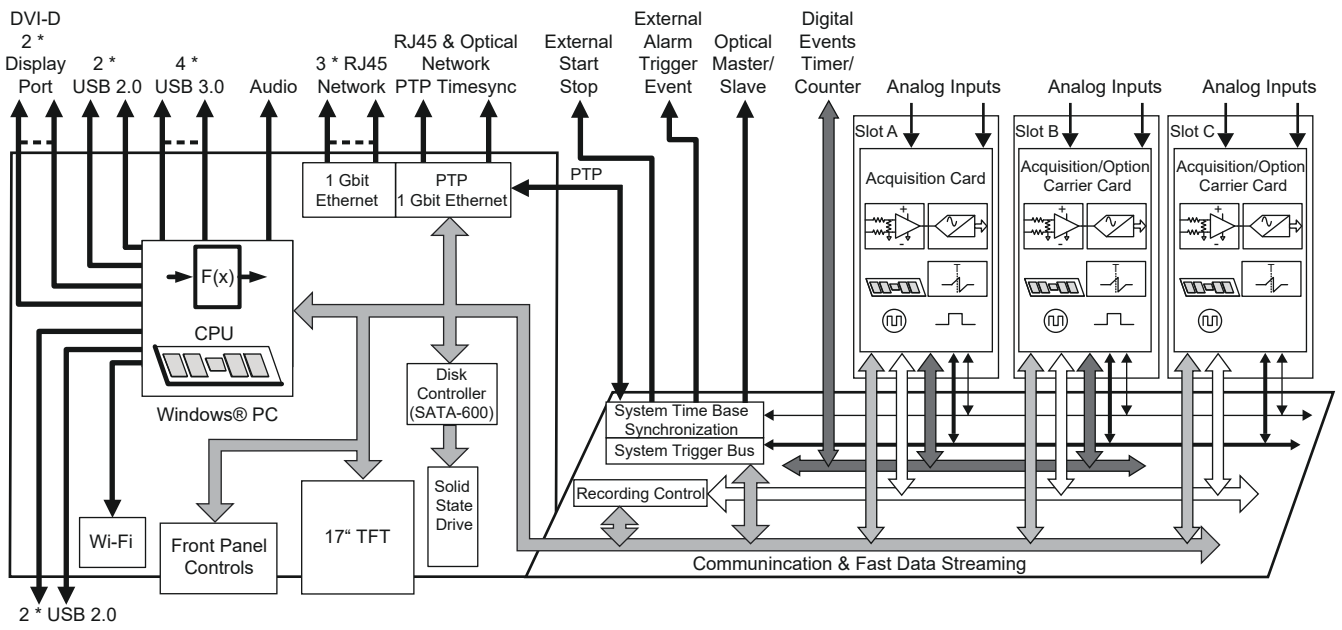

Figure 1.1: Block diagram

Windows® PC

Memory	8 GB; DDR3 RAM
Processor	Intel 3610ME, Core™ i5 3rd generation; 2 Core, 4 threads; 2.7 GHz, 3.3 GHz turbo
Ethernet	1 * RJ45 Ethernet connection with PTPv2 support; 1 Gbit/s 3 * RJ45 Ethernet connection without PTPv2 support; 1 Gbit/s 1 * SFP based optical Ethernet connection with PTPv2 support; 1 Gbit/s; supports 850 and 1310 nm SFP modules.
Wake on LAN	Supported on all Ethernet ports
Wireless LAN (WIFI)	Embedded 801.11b/g/n; 54, 100 and 300 Mbit/s; wireless LAN can be hardware disabled
USB connectors	USB 2.0, two in back + two in front USB 3.0, four in back (using selective SSD > 100 MB/s continuous streaming)
Internal storage PC disk	Solid State Drive (SSD), unformatted size 480 GB, 200 MB/s continuous streaming. The size of SSDs increases almost every year. Contact the local HBM support team or custom systems(1) for availability.
Display	TFT SXGA touch screen, 17” / 1280x1024 resolution
Video connection	2 * Display port and 1 * DVI-D connector; CRT 2048x1536 and DVI-D 1600x1200
Multiple monitors support	3; clone mode and extended mode
Speaker/Speaker Out	Internal speaker/jack plug 3.5 mm
Microphone	Jack plug 3.5 mm
Accessories	Protective carrying bag, USB keyboard and USB optical mouse
Front panel controls	4; direct recording control for Start/Stop/Pause/Trigger

(1) Contact custom systems at: customsystems@hbm.com

Software	
Instrument Panel/touch interface (Fully touch-optimized)	Setup of instrument, Acquisition control, Display data: live/review, Basic measurements, Export and archiving, Basic reporting
DAQ software	Perception Advanced package. Includes real-time live and recorded data review using y/t and x/y displays. Y/t displays support vertical, horizontal and slope cursors, trace and display markers as well as an interactive waveform calculator. On top Perception allows synchronized video playback. For data analysis Perception supports interactive user keys with macro support, Formula Database with waveform and math calculators. To create a report of the recorded and analysis data Perception supports adding additional meta data describing your test details, quick report to Microsoft Word® and Excel®, an advanced built-in report engine. If analysis in third party software is preferred 20 export format (Including MATLAB, DIAdem, MDF4/ASAM, UFF58 and more) are supported. For automated analysis, reporting or data exports Perception supports extensive automation and result logging features.
DAQ software options	Basic FFT, Sensor Database, User Definer Mode and Multi Mainframe Control.
DAQ software and Instrument Panel languages	English, German, French, Chinese, Japanese, Korean, Russian, Portuguese (Brazilian)
Operating system	Microsoft Windows® 10 PRO (Windows® 7 Ultimate for systems shipped before November 2016)
Languages installed in operating system	English, German, French, Chinese, Japanese Other languages can be downloaded and installed using "Windows® Update"

Acquisition System	
System Time Base and Synchronization Central time base for all acquisition cards	
Accuracy	± 3.5 ppm; aging after 10 years ± 10 ppm
Base	Binary, Decimal or External
Synchronization sources	IEEE1588:2008 PTPv2 (Precision Time Protocol) using an End-to-End protocol Master/Slave synchronization; Slave or Master mode on built-in connector Master output card (G083): Option to synchronize up to 16 Slave systems
PTP synchronization accuracy	± 150 ns; no Ethernet switch used When network switches are required, use only PTP IPv4 aware switches that support End-to-End set-ups. Overall accuracy depends on PTP switch used. **Note:** PTP aware switches require PTP setup, refer to the operating manual of the switch for more details.
Acquisition Slots Unused slots must be covered using the GEN DAQ blind panel. This closes the mainframe front panels for EMC/EMI and safety compliance and also regulates the internal airflow to cool the acquisition system correctly.	
Maximum slots	3
Acquisition cards	Any combination of GEN DAQ acquisition cards which support fast data streaming
Digital Event/Timer/Counter connector	1; Connected to slots A and B
Thermal control	Every acquisition card and the acquisition system monitors its own temperature and status. This is used to regulate fan speeds and reduce noise while optimizing airflow and power consumption.
Calibration	Any changes to the acquisition system configuration may change its internal thermal gradients. As accurate calibration relies on a steady and repeatable thermal environment, calibration is void if changes are made in the configuration. For information on calibration impact, please refer to the individual card specifications.

Connection Overview

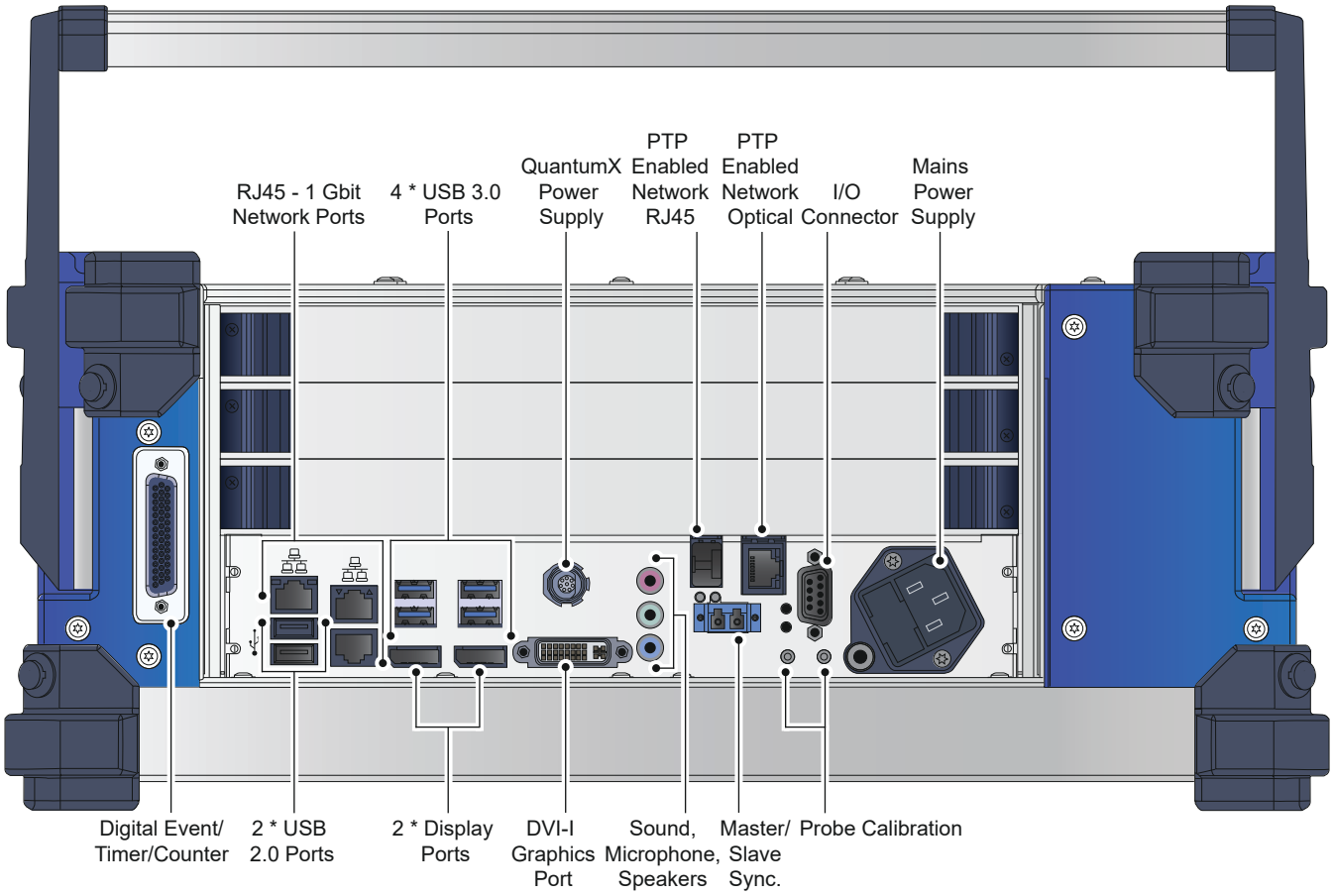

Figure 1.2: Connection overview

GEN3i Stand-Alone Recorded Data Storage Overview

Using GEN3i in stand-alone mode allows for several storage options. The built-in SSD is directly controlled by the Windows® PC inside the GEN3i. As a result all storage options are Perception PC storage based. Continuous streaming throughput is tested by using 48 hours of circular recordings at specified data rates.

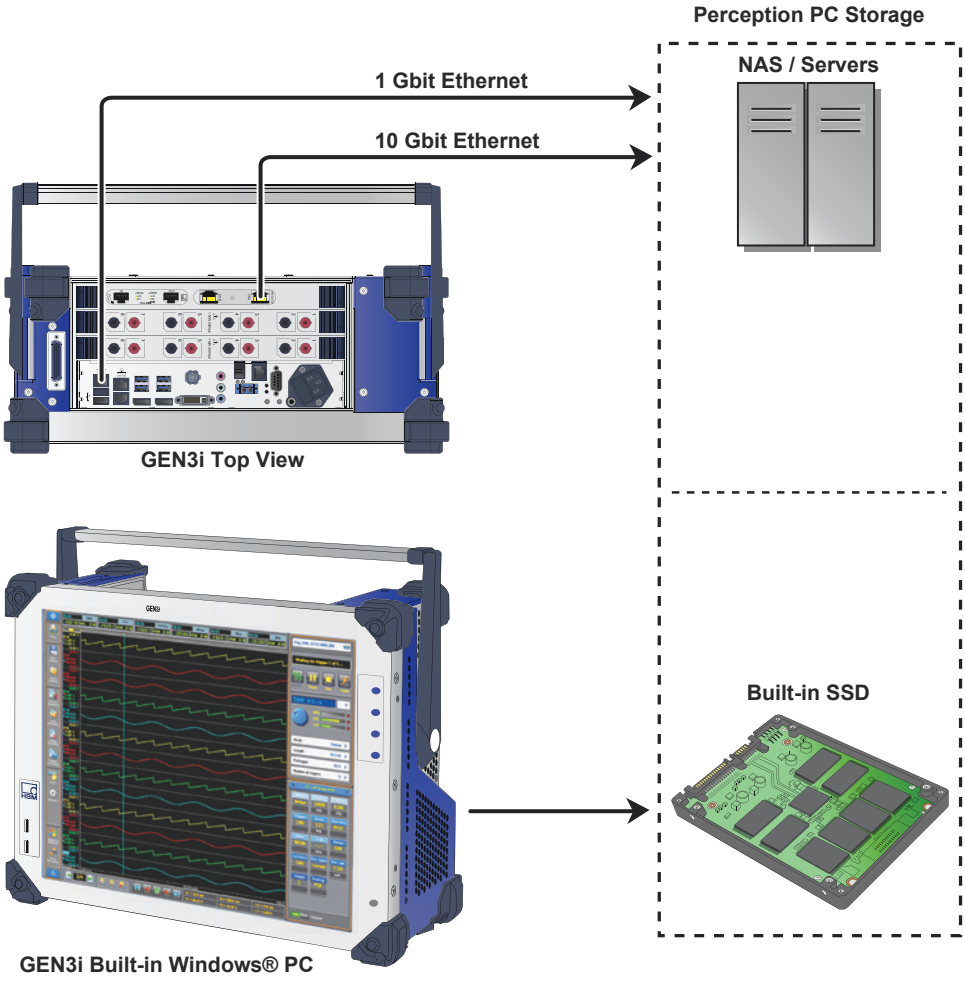

Figure 1.3: Data storage overview

Maximum continuous data storage rates	**Perception PC storage (GEN3i)**
Built-in SSD	200 MB/s(2)
Server storage	
1 Gbit Ethernet (optical or electrical)	100 MB/s(3)
10 Gbit Ethernet (optical or electrical, option)	400 MB/s(1)(4)
Power failure data security	
Continuous recording	When storing continuous recorded data on the built-in SSD Perception secures all recorded data is stored on the SSD on regular intervals. The interval time depends on the continuous data storage rate used. A sudden power loss at higher continuous data storage rates results in more recording time loss just before the moment the power disappeared.
Sweep and dual rate recording	When storing sweeps and/or dual rate recordings the data storage behavior is heavily depending on the triggers detected by the system. Sudden bursts of triggers mean a lot of data to be stored. A power loss during or right after this trigger burst will result in much more data loss compared to a moment in time the system is waiting for triggers.

(1) Legacy cards do not support the enhanced fast streaming bus. The maximum aggregate storage rate for legacy cards is 200 MB/s.

(2) Tested using circular recording for 48 hours.

(3) Tested using circular recording for 48 hours. Test setup uses a Synology® DS212 configured with a two disk RAID 0 partition.

(4) Tested using circular recording for 48 hours. Test setup uses a Synology® DS3412 configured with a eight disk RAID 0 partition and a 10 Gbit Ethernet link.

GEN3i Remote Controlled Recorded Data Storage Overview

Using GEN3i in remote mode allows for several storage options. While in remote control, Perception on the GEN3i Windows® PC is closed. As a result all Solid State Drives (internal and removable) are not usable anymore.
Continuous streaming throughput is tested by using 48 hours of circular recordings at specified data rates.

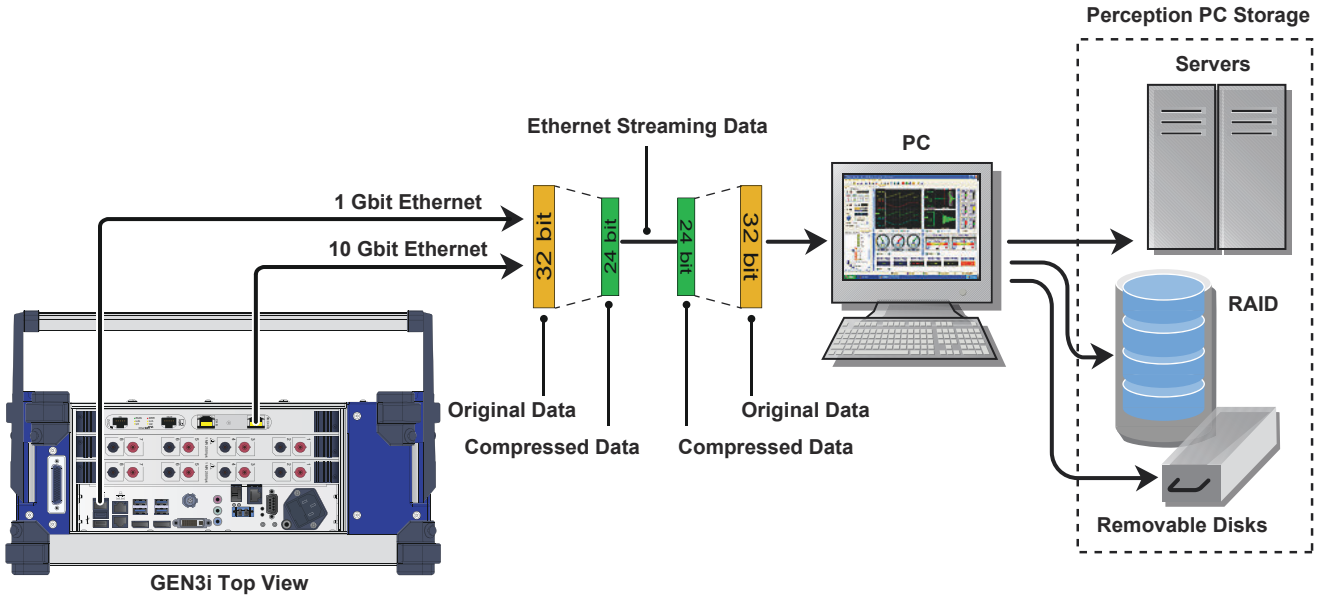

Figure 1.4: Remote data storage overview

Maximum continuous data storage rates (tested using full disk circular recording for 48 hours)	**Perception PC storage**	
	Uncompressed	Compressed
1 Gbit Ethernet (optical or electrical)	100 MB/s(1)	Up to 175 MB/s(1)(2)
10 Gbit Ethernet (optical or electrical, option)	400 MB/s(3)	n/a
Built-in SSD	Not usable in this mode	Not usable in this mode

(1) Test setup uses a Windows® 7 PC with Intel i7 CPU and SSD with sustained write speeds exceeding 250 MB/s.

(2) Compression ratio is defined by the ADC channel width. For details, please refer to the "Streaming Compression Ratio" table (below). Rate is valid before decompressing storage data to maintain backward PNRF compatibility.

(3) Test setup uses a Windows® 7 PC with Intel i7 CPU and SSD with sustained write speeds exceeding 700 MB/s and a 10 Gbit Ethernet link.

Analog Channel Streaming Compression Ratio

Acquisition cards	**Sample width**	**Compression ratio**	
		16 bit storage	**32 bit storage**
GN310B, GN311B	18 bits	1 : 1	1.75 : 1
GN610B, GN611B	18 bits	1 : 1	1.75 : 1
GN815, GN816	18 bits	1 : 1	1.75 : 1
GN840B, GN1640B	24 bits	1 : 1	1.33 : 1
GN1202B	14 bits	1 : 1	N/A
GN3210, GN3211	24 bits	1 : 1	1.33 : 1
GN8101B, GN8102B, GN8103B	14 bits	1 : 1	N/A

Master/Slave Synchronization

GEN series mainframes support a Master/Slave synchronization connector. The connector can be used as a single Master output or as a Slave input. The Master output function can be extended using the Master output card (G083).

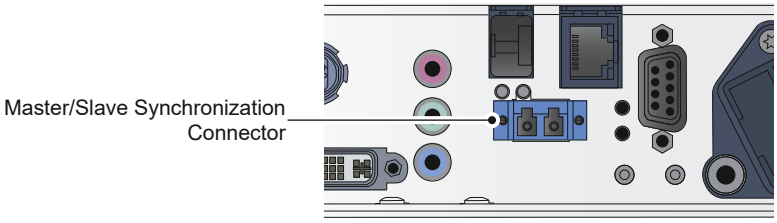

Figure 1.5: Master/Slave synchronization connector

Mainframe to mainframe phase shift	± 150 ns RMS
LED signaling	Optical link synchronized, not connected, function disabled
Master mode	Basic and extended synchronization supported; Supports one Slave. Multiple Slave support by using one or more optional Master output cards (G083)
Slave mode	Basic and extended synchronization supported
Maximum number of mainframes	2; more mainframes supported when using one or more optional Master output cards (G083)
Time required to full synchronization after Master/Slave signal detected	
No recording active	Typically 1 minute
Recording or pause active	1 minute and an additional 25 s per ms recording time deviation from Master time
User notifications while recording	Time marks on Master/Slave signal lost/restored and Master/Slave time synchronized
Basic synchronization	
Cable length propagation delay	Automatic cable length detection and propagation delay compensation
First sample	Synchronizes the first sample in a continuous recording for each mainframe. Cable length propagation delay not compensated for at start of recording. First samples not recorded in the Slave mainframes, as defined by the propagation delays. Signal phase shifts are not introduced by this propagation delay.
Synchronized time base	Prevents frequency drift of the sample rates within each mainframe
Measured channel trigger exchange	Synchronously exchanges measured channel triggers connected to the Master/Slave trigger bus to/from each connected mainframe. Typically used for the sweep recording modes.
Compatibility	Basic synchronization features are backward compatible with GEN series Master/Slave card option for both Master and Slave modes
Extended synchronization	
Calculated channel trigger exchange	Additional trigger bus to synchronously exchange trigger conditions detected on real-time calculated (RTC) channels between mainframes. RTC channel triggers have a longer delay caused by the required calculation time prior to establishing a trigger.
Synchronous manual trigger	User action within Perception to trigger all mainframes synchronously
Synchronous recording actions	Start/Stop and Pause a recording across multiple mainframes, each of which is controlled by a separate instance of Perception. Stop recording is a non-synchronous action. Synchronously records distributed data with a mix of two GEN DAQ mainframes in Master/Slave setup while running Perception on each of the mainframes. A more typical Master/Slave setup would be to stop Perception on one system and use one instance of Perception application to control both systems.
Compatibility	Extended synchronization features are not supported by the legacy Master/Slave card option. A mixed system setup automatically works with basic synchronization.
Connection	
Optical wavelength	850 nm
Optical cable type	Multi Mode 50/125 µm
Optical data rate	2 Gbit/s
Maximum cable length	500 m
Connector type	Duplex LC

Synchronization Specification Overview

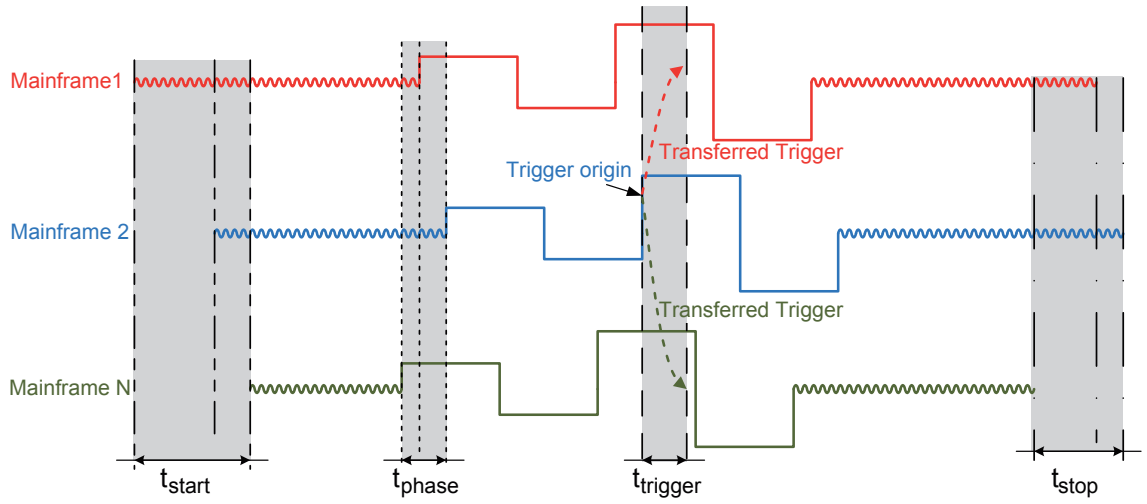

Figure 1.6: Synchronization specification overview

Master to Slave and Slave to Slave timing	t_{phase} (1)	t_{start} (2)	t_{stop} (3)	$t_{trigger}$ (4) (5)
Synchronization source				
Master/Slave	≤ 150 ns	≤ cable delay	≤ 1 s	≤ 150 ns
PTP	≤ 150 ns	≤ 1 s	≤ 1 s	≤ (516 µs + cable delays)
No synchronization source				
Mainframes connected by Perception simultaneously	≤ 1 s	≤ 1 s	≤ 1 s	≤ 1 s
Additional error after connection	≤ 0.5 s/hour	≤ 0.5 s/hour	≤ 0.5 s/hour	≤ 0.5 s/hour

(1) t_{phase} Maximum phase difference between signals. *(This specification is not affected by any of the other specifications).*

(2) t_{start} Maximum delay between the start of recording for each mainframe.

(3) t_{stop} Maximum delay between the stop of recording for each mainframe.

(4) $t_{trigger}$ Maximum delay to transfer a trigger from one mainframe to all other mainframes.

(5) **Note** on trigger exchange
Trigger exchange is included in the Master/Slave synchronization cable. All other synchronization modes require that the mainframes are connected from each External Trigger Out to each External Trigger In on all the mainframes in order to exchange triggers.

I/O Connector

PIN Signal
PIN 1 - External Event In
PIN 2 - External Event Out
PIN 3 - External Trigger In
PIN 4 - Ground
PIN 5 - Ground
PIN 6 - External Start In
PIN 7 - External Trigger Out
PIN 8 - External Stop In
PIN 9 - +5V

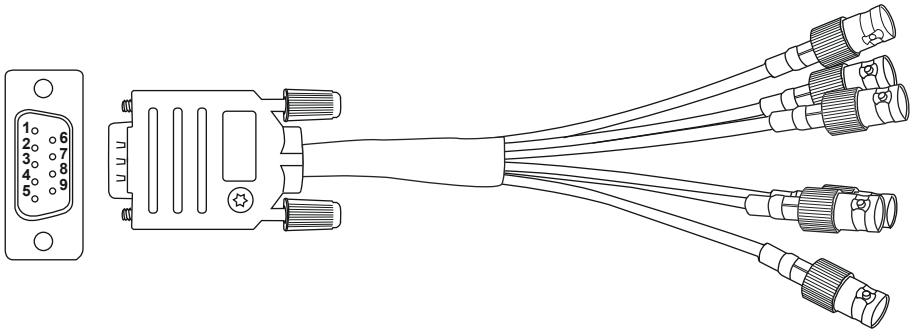

Figure 1.7: Pin assignment breakout cable

Connector type	TE (Tyco Electronics) connectivity: 2-5747706-0 (D-sub, 9-pin female)
Mating connector type	TE (Tyco Electronics) connectivity: 5-747904-5
1-KAB2132-0_5: Breakout cable (Option, to be ordered separately)	
Cable type	Coax
Connector type	6; BNC female
Length	0.5 m (1.6 ft)
External Trigger In	
Levels	TTL compatible, Low -30 V to 0.7 V, High 2 V to 30 V Input has an internal pull-up of 20 kΩ ± 1% to 5 V
Input overvoltage protection	± 25 V DC, ± 30 V peak <1 minute
Resolution	50 ns
Minimum pulse width	500 ns
Active edge	Rising or falling; software selectable
Delay	± 1 µs + up to one sample period (for decimal and binary time base)
Send to External Trigger Out	User can select to forward External Trigger In to the External Trigger Out BNC
Top Dead Center Rotational input	Used to indicate top dead center in rotational external time base
External Trigger Out	
Levels	TTL compatible; 0 V < Low < 0.6 V; 2 V < High < 5 V
Active level	High/Low/Hold High; software selectable
Pulse width	High or Low selected: 12.5 to 12.8 µs Hold High selected: Active from first trigger to end of recording
Maximum output current	50 mA, short circuit protected
Output impedance	49.9 Ω ± 1%
Short circuit protected	Continuous
Delay	User selectable; minimum value may vary for each acquisition card. Default 516 ± 1 µs (504 Binary sample rates) + up to one sample period; Filter set to wideband (1)
External Event Out	
Levels	TTL compatible; 0 V < Low < 0.6 V; 2 V < High < 5 V
Function	Alarm or Recording Active output; software selectable
Active level	High/Low for Alarm output; software selectable Recording active High output
Pulse width	Alarm: Active from start of alarm condition until condition ends Recording: Active until recording stops
Maximum output current	50 mA, short circuit protected
Output impedance	49.9 Ω ± 1%
Short circuit protected	Continuous
Delay	User selected external trigger output delay - 1 µs

I/O Connector	
External Start In	
Levels	TTL compatible, Low -30 V to 0.7 V, High 2 V to 30 V Input has an internal pull-up of 20 kΩ ± 1% to 5 V
Input overvoltage protection	± 25 V DC, ± 30 V peak <1 minute
Minimum Pulse width	200 ns
Active edge	Rising/falling edge; software selectable
Start response time	Typically 1 s when system is completely idle
External Stop In	
Levels	TTL compatible, Low -30 V to 0.7 V, High 2 V to 30 V Input has an internal pull-up of 20 kΩ ± 1% to 5 V
Input overvoltage protection	± 25 V DC, ± 30 V peak <1 minute
Minimum Pulse width	200 ns
Active edge	Rising/falling edge; software selectable
Stop response time	Typically 1 s when system is recording without automation

(1) If an analog and/or digital filter is used, extra delay will be added, depending on the type of filter and signal frequency.

Digital Event/Timer/Counter

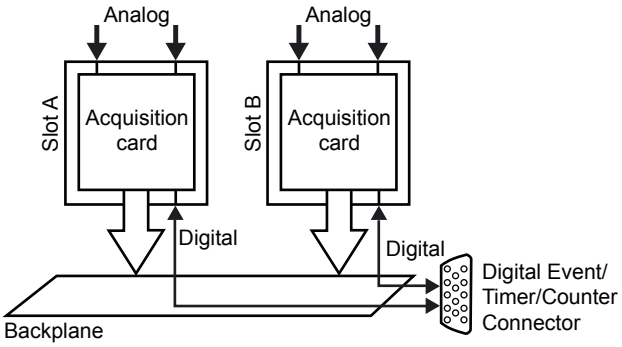

Figure 1.8: Digital Event/Timer/Counter block diagram

Number of connectors	1
Connector type	44 pin, female D-type connector, AMP HD-22 series (Tyco/TE connectivity: 5748482-5)
Mating cable connector type	44 pin, male D-type connector, HDP-22 series (Tyco/TE connectivity: 1658680-1)
Output power	
Voltage	5 ± 0.5 V DC
Maximum current	0.5 A
Event Inputs	
Number of event inputs	16 per card, 2 cards per connector
Levels	TTL Compatible, Low -30 V to 0.7 V, High 2 V to 30 V
	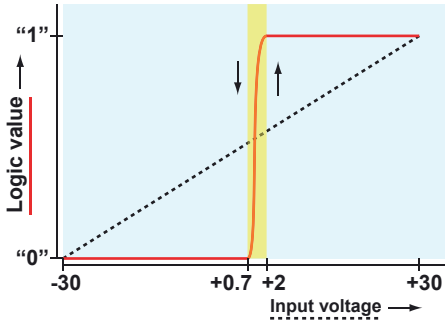 **Figure 1.9:** Logic threshold voltage levels
Overvoltage protection	± 30 V DC
Timer/Counter	
Number of channels	Two per card, two cards per connector
Functions	See specifications of the acquisition cards that support these inputs
Outputs	
Number of outputs	Two per card, two cards per connector
Functions	See specifications of acquisition cards that support these outputs
Output levels	TTL compatible; 0 V < Low < 0.6V; 2 V < High < 5 V
Output resistance	49.9 Ω ± 1%
Maximum output current	50 mA, short circuit protected

Digital Event/Timer/Counter Connector Pin Assignment

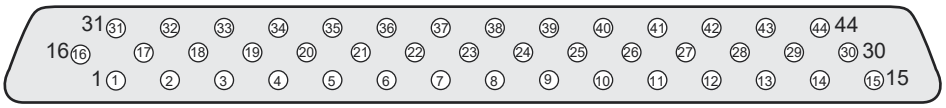

PIN 1 - Event Input 1A & Reset Timer/Counter 2A
PIN 2 - Event Input 2A & Direction Timer/Counter 2A
PIN 3 - Event Input 3A & Clock Timer/Counter 2A
PIN 4 - Event Input 4A
PIN 5 - Event Input 5A
PIN 6 - Event Input 6A
PIN 7 - Event Input 7A
PIN 8 - Event Input 8A
PIN 9 - Event Input 9A
PIN 10 - Event Input 10A & Reset Timer/Counter 1A
PIN 11 - Event Input 11A & Direction Timer/Counter 1A
PIN 12 - Event Input 12A & Clock Timer/Counter 1A
PIN 13 - Event Input 1B & Reset Timer/Counter 2B
PIN 14 - Event Input 2B & Direction Timer/Counter 2B
PIN 15 - Event Input 3B & Clock Timer/Counter 2B
PIN 16 - Event Input 4B
PIN 17 - Event Input 5B
PIN 18 - Event Input 6B
PIN 19 - Event Input 7B
PIN 20 - Event Input 8B
PIN 21 - Event Input 9B
PIN 22 - Event Input 10B & Reset Timer/Counter 1B
PIN 23 - Event Input 11B & Direction Timer/Counter 1B
PIN 24 - Event Input 12B & Clock Timer/Counter 1B
PIN 25 - Event Input 13B
PIN 26 - Event Input 14B
PIN 27 - Ground
PIN 28 - Ground
PIN 29 - Ground
PIN 30 - Ground
PIN 31 - Event Input 15B
PIN 32 - Event Input 16B
PIN 33 - Event Input 13A
PIN 34 - Event Input 14A
PIN 35 - Event Input 15A
PIN 36 - Event Input 16A
PIN 37 - Event Output 2B
PIN 38 - Event Output 1B
PIN 39 - Event Output 2A
PIN 40 - Event Output 1A
PIN 41 - Ground
PIN 42 - Ground
PIN 43 - +5 V Power
PIN 44 - +5 V Power

Figure 1.10: Pin diagram for Digital Event/Timer/Counter connector

DC Power Output

Connector type	ODU, G81L0C-P08LFG0-0000
Mating connector type	ODU, SX1LOC−P08MFG0−0000
Connector pinning	QuantumX compatible; only GND and PWR signals connected
Output Power	15 Watt
Output Voltage	> 11 V; Typically 11.5 V to 12 V
Maximum Output Current	1.4 A; Limited current and short circuit protected

PIN Signal
PIN 1 - Reserved/not connected
PIN 2 - Reserved/not connected
PIN 3 - GND
PIN 4 - Reserved/not connected
PIN 5 - Reserved/not connected
PIN 6 - Reserved/not connected
PIN 7 - PWR
PIN 8 - Reserved/not connected

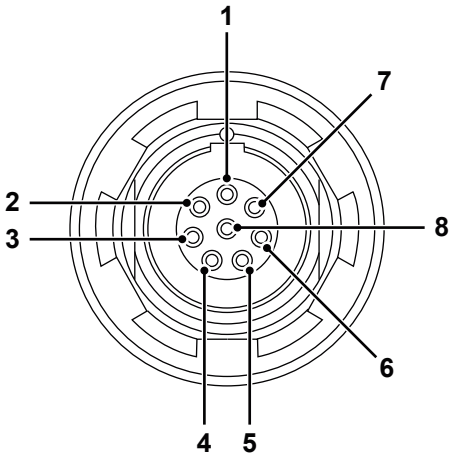

Figure 1.11: Connector power output

Probe Calibration

Pins	2; Signal and ground
Signal	~1 kHz square wave
Signal amplitude	0 V to 2 V using 1 MΩ load 0 V to 1 V using 50 Ω load

Power

Power Inlet	47-63 Hz, 100-240 V AC
Total Power of unit (maximum)	250 VA, 300 VA peak

Physical, Weight and Dimensions	
Weight	
Mainframe	9 kg (20.9 lb), add ≈ 1 kg (2.2 lb) per acquisition card installed
Dimensions	
Height/Height with handle	342 mm/392 mm (13.5"/15.4")
Width	436 mm (17.2")
Depth	186 mm (7.3")
Acoustic Noise	The total A-weighted SPL 55 dBA @ 0.6 m maximum
Temperature Sensors	For temperature monitoring and air flow control
Cooling Fans	2
Handle	One handle used for carrying and tilting the unit to higher tilt angles
Tilting Feet	Two retractable feet for small tilt angles
Grounding	4 mm Banana plug
Casing	Aluminum/Plastic cover

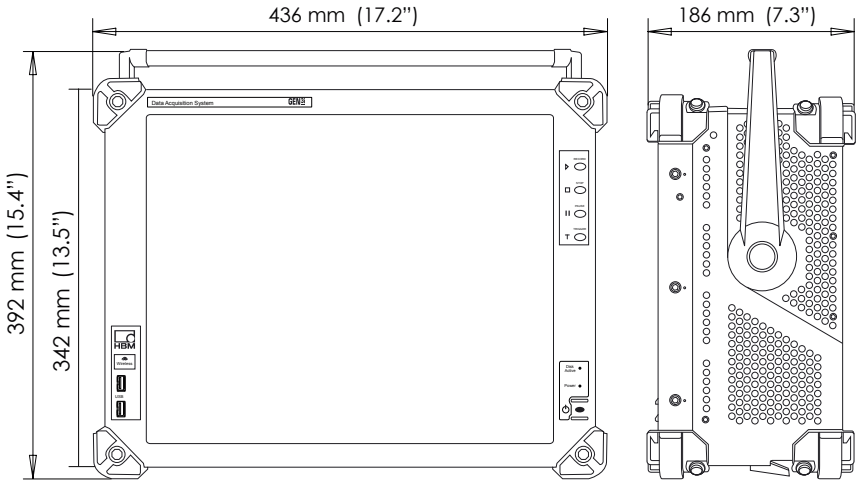

Figure 1.12: GEN3i dimensions

Accessories	Soft carry case with strap for transportation included. The case has a hardened front and back for protection and two storage pouches for a mouse and keyboard

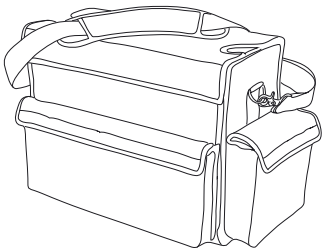

Figure 1.13: Soft carry case

Environmental Specifications

Temperature Range	
Operational	0 °C to +40 °C (+32 °F to +104 °F)
Non-operational (Storage)	-25 °C to +70 °C (-13 °F to +158 °F)
Thermal protection	Automatic thermal shutdown at 85 °C (+185 °F) internal temperature User warning notifications at 75 °C (+167 °F)
Relative humidity	0% to 80%; non-condensing; operational
Protection class	IP20
Altitude	Maximum 2000 m (6562 ft) above sea level; operational
Shock: IEC 60068-2-27	
Operational	Half-sine 10 g/11 ms; 3-axis, 1000 shocks in positive and negative direction
Non-operational	Half-sine 25 g/6 ms; 3-axis, 3 shocks in positive and negative direction
Vibration: IEC 60068-2-64	
Operational	1 g RMS, ½ h; 3-axis, random 5 to 500 Hz
Non-operational	2 g RMS, 1 h; 3-axis, random 5 to 500 Hz
Operational Environmental Tests	
Cold test IEC60068-2-1 Test Ad	-5 °C (+23 °F) for 2 hours
Dry heat test IEC-60068-2-2 Test Bd	+40 °C (+104 °F) for 2 hours
Damp heat test IEC60068-2-3 Test Ca	+40 °C (+104 °F), humidity > 93% RH for 4 days
Non-Operational (Storage) Environmental Tests	
Cold test IEC-60068-2-1 Test Ab	-25 °C (-13 °F) for 72 hours
Dry heat test IEC-60068-2-2 Test Bb	+70 °C (+158 °F) humidity < 50% RH for 96 hours
Change of temperature test IEC60068-2-14 Test Na	-25 °C to +70 °C (-13 °F to +158 °F) 5 cycles, rate 2 to 3 minutes, dwell time 3 hours
Damp heat cyclic test IEC60068-2-30 Test Db variant 1	+25 °C/+40 °C (+77 °F/+104 °F), humidity > 95/90% RH 6 cycles, cycle duration 24 hours

Harmonized Standards for CE Compliance, According to the Following Directives

Low Voltage Directive (LVD): 2014/35/EU
Electromagnetic Compatibility Directive (EMC): 2014/30/EU

Electrical Safety	
EN 61010-1 (2010)	Safety requirements for electrical equipment for measurement, control, and laboratory use - General requirements
EN 61010-2-030 (2010)	Particular requirements for testing and measuring circuits
Electromagnetic Compatibility	
EN 61326-1 (2013)	Electrical equipment for measurement, control and laboratory use - EMC requirements - Part 1: General requirements
Emission	
EN 55011	Industrial, scientific and medical equipment - Radio-frequency disturbance characteristics - Limits and methods of measurement Conducted disturbance: class B; Radiated disturbance: class A
EN 61000-3-2	Limits for harmonic current emissions: class D
EN 61000-3-3	Limitation of voltage changes, voltage fluctuations and flicker in public low voltage supply systems
Immunity	
EN 61000-4-2	Electrostatic discharge immunity test (ESD); contact discharge ± 4 kV/air discharge ± 8 kV: performance criteria B
EN 61000-4-3	Radiated, radio-frequency, electromagnetic field immunity test; 80 MHz to 2.7 GHz using 10 V/m, 1000 Hz AM: performance criteria A
EN 61000-4-4	Electrical fast transient/burst immunity test Mains ± 2 kV using coupling network. Channel ± 2 kV using capacitive clamp: performance criteria B
EN 61000-4-5	Surge immunity test Mains ± 0.5 kV/± 1 kV Line-Line and ± 0.5 kV/± 1 kV/± 2 kV Line-earth Channel ± 0.5 kV/± 1 kV using coupling network: performance criteria B
EN 61000-4-6	Immunity to conducted disturbances, induced by radio-frequency fields 150 kHz to 80 MHz, 1000 Hz AM; 10 V RMS @ mains, 3 V RMS @ channel, both using clamp: performance criteria A
EN 61000-4-11	Voltage dips, short interruptions and voltage variations immunity tests Dips: performance criteria A; Interruptions: performance criteria C

G081: Option Carrier Card (Option, to be ordered separately)

Used to enable optional synchronization and other interface cards. (See option card specifications for more details)

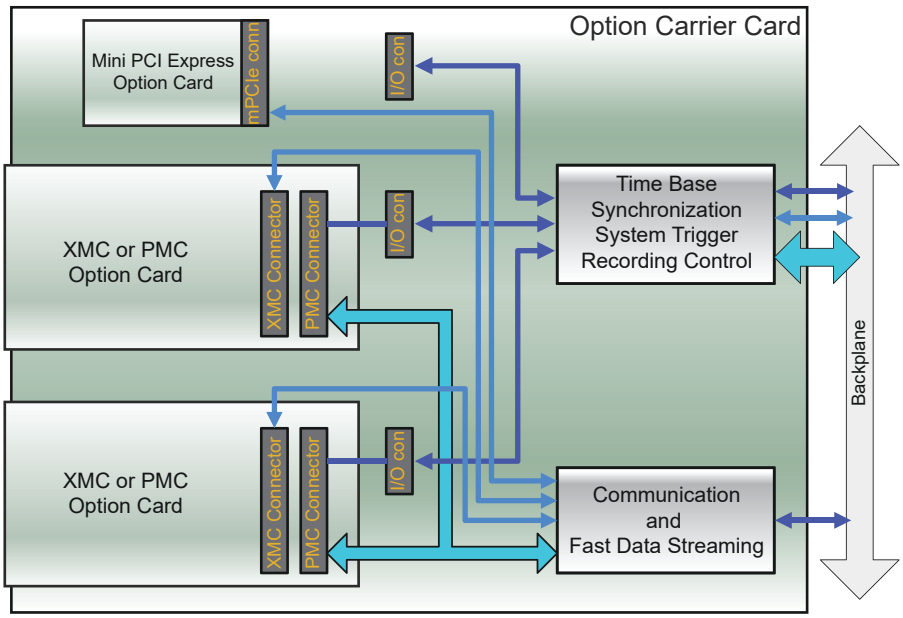

Figure 1.14: Block diagram option carrier card

Maximum option carrier cards	Limited by size of mainframe (number of slots -1) All mainframe slots can be used with an option carrier card. Each mainframe needs at least one acquisition card.
Supported mainframes	GEN2tB, GEN3i, GEN4tB, GEN7i, GEN7tA and GEN17tA Requires a fast data streaming bus (PCIe)(1)
Option card types	
PMC/XMC cards	Two per option carrier card
Mini PCI express cards	One per option carrier card
Supported PMC/XMC option cards	
Master output card	1-G083 Master output card to support four Slave mainframes per Master output card Two Master output cards per option carrier card, multiple option carrier cards per mainframe
10 Gbit Ethernet card, optical	1-G064 10 Gbit Ethernet card with SFP modules to support 850 nm and 1330 nm optical networks One Ethernet option card per mainframe, cannot be combined with 1-G084
10 Gbit Ethernet card, electrical	1-G084 10 Gbit Ethernet card with RJ45 copper cable support One Ethernet option card per mainframe, cannot be combined with 1-G064
EtherCAT® card	1-G082 EtherCAT® card with configurable slave SDO and PDO data output (no setup) One EtherCAT® option card per mainframe EtherCAT® card not supported in GEN3i and GEN7i
At the time of this specification's release, no Mini PCI express option cards are supported	

(1) Legacy mainframes have different means of supporting similar options

G083: Master Output Card (Option, to be ordered separately)

Supports up to four Slave mainframes, multiple Master output cards supported (G081 option carrier card required)

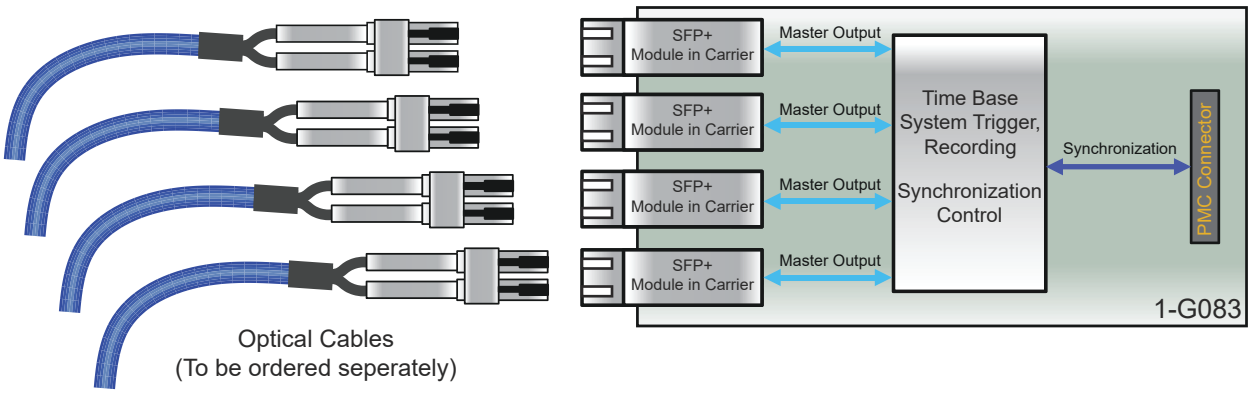

Figure 1.15: Block diagram Master output card (G081 required)

Master outputs	Four per Master output card. Up to two Master output cards per option carrier card. All but the first mainframe slots can be filled with option carrier cards.
Mainframe to mainframe phase shift	± 150 ns RMS; measured on analog signals using identical acquisition modules, identical sample rates and filter settings in each mainframe
LED signaling	Optical link synchronized, not connected, function disabled
Master mode	Basic and extended synchronization supported; four Slaves per Master output card Two Master output cards per option carrier card, multiple option carrier cards per mainframe
Slave mode	Not supported. Use Master/Slave synchronization connector of mainframe for Slave mode.
Maximum mainframes	GEN2tB: 9 Slave mainframes, 10 including Master mainframe GEN4tB: 25 Slave mainframes, 26 including Master mainframe GEN3i: 17 Slave mainframes, 18 including Master mainframe GEN7i and GEN7tA: 49 Slave mainframes, 50 including Master mainframe GEN17tA: 129 Slave mainframes, 130 including Master mainframe
Time required to full synchronization after Master/Slave signal detected	
No recording active	1 minute typical
Recording or pause active	1 minute plus 25 s per ms recording time deviation from Master time
User notifications while recording	Time marks on Master/Slave signal lost/restored and Master/Slave time synchronized
Basic synchronization (backward compatible with the legacy GEN series Master/Slave card option)	
Cable length propagation delay	±5 ns/m; Automatic cable length detection and propagation delay compensation
First sample	Synchronizes the first sample in a continuous recording for each mainframe. First samples are not recorded in the Slave mainframes defined by the cable length propagation delays. Signal phase shifts are not introduced by this propagation delay.
Synchronized time base	Prevents frequency drift of the sample rates within each mainframe
Measured channel trigger exchange	Synchronously exchanges measured channel triggers connected to the Master/Slave trigger bus between mainframes. Typically used for the sweep recording modes.
Extended synchronization (Not supported by the legacy GEN series Master/Slave card option)	
Calculated channel trigger exchange	Synchronously exchanges real-time calculated (RTC) channel triggers between mainframes. Separate exchange required due to the longer internal delays of RTC channel triggers that were caused by the mathematics prior to establishing a trigger.
Synchronous manual trigger	User action within Perception to trigger all mainframes synchronously
Synchronous recording actions	Start/Stop and Pause a recording across multiple mainframes, each controlled by a separate instance of Perception. Stop recording is a non-synchronous action. Synchronously records distributed data with a mix of GEN7i/GEN3i mainframes in Master/Slave setup while running Perception on each of the mainframes. A more typical Master/Slave setup would be to control both systems from one Perception application.
Connection	
Optical wavelength	850 nm
Optical cable type	Multi Mode 50/125 µm (KAB280)
Optical data rate	2 Gbit/s SFP (not compatible with 1 Gbit optical network SFP 1-G062)
Maximum cable length	500 m; Propagation delay caused by cable length automatically compensated for
Connector type	Duplex LC

G064: 10Gbit Ethernet Card, Optical (Option, to be ordered separately)

Supports up to two 10Gbit Ethernet connections using SFP+ modules with optical LC connectors (G081 option carrier card required)

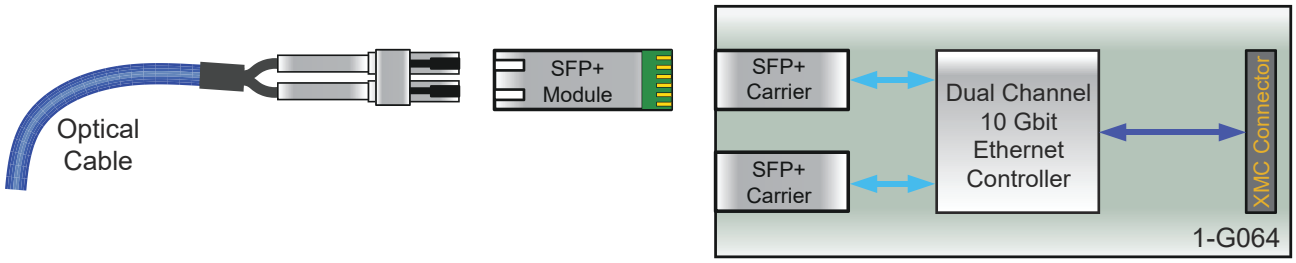

Figure 1.16: Block diagram 10Gbit Ethernet card, optical (G081 required)

Maximum number of Ethernet option cards	One Ethernet option card per mainframe, cannot be combined with 1-G084
Network interface	Up to two interfaces each 10 Gbit/s optical using SFP+ modules with LC connectors
Supported SFP+ modules	Multi Mode (10GBASE-SR), to be ordered separately Single Mode (10GBASE-LR), to be ordered separately
Multi Mode SFP+ module (10GBASE-SR)	
Ordering part number	1-G065
Ethernet Speed	1 or 10 Gbit (auto detection)
Optical wave length	850 nm
Maximum cable length	82 m (269 ft) using OM3 specified optical cable (KAB280)
Single Mode SFP+ module (10GBASE-LR)	
Ordering part number	1-G066
Ethernet Speed	1 or 10 Gbit (auto detection)
Optical wave length	1310 nm
Maximum cable length	10 km (6.2 mi) using OS2 specified optical cable (KAB288 or KAB289)
TCP/IP IPv4	
Address setup	DHCP/Auto IP or fixed IP
DHCP setup	When DHCP fails, the APIPA (Automatic Private IP Addressing) setup is used similarly to Windows® PCs
Gateway setup	Gateway setup supported for control through VPN and/or Internet
TCP/IP IPv6	Not supported
PTPv2 (IEEE1588:2008) synchronization	Not supported on Ethernet option cards
Wake-on-LAN	Not supported on Ethernet option cards
Multiple Ethernet use cases	PTPv2 (IEEE1588:2008) can be used on a separate (dedicated) Ethernet interface A combination of 10 Gbit and 1 Gbit Ethernet interfaces is supported
Maximum transfer speed	
Continuous recording to remote PC	400 MB/s(1)

(1) Tested using circular recording for 48 hours. Test setup uses a Windows® 7 PC with Intel i7 CPU and SSD with sustained write speeds exceeding 700 MB/s and a 10 Gbit Ethernet link.

G084: 10Gbit Ethernet Card, Electrical (Option, to be ordered separately)

Supports up to two 10Gbit Ethernet connections using RJ45 connectors (G081 option carrier card required)

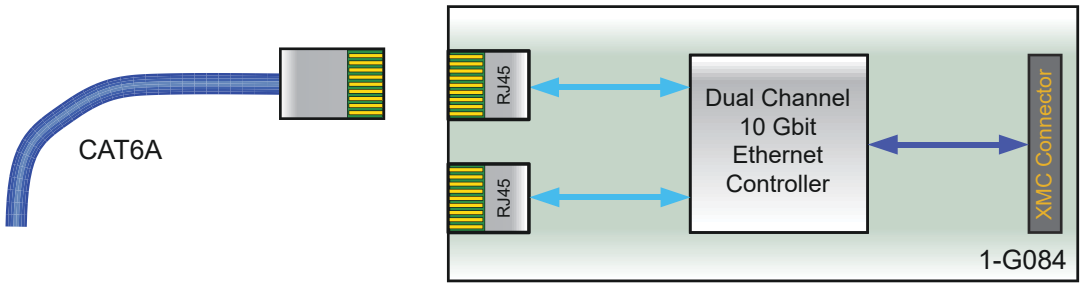

Figure 1.17: Block diagram 10Gbit Ethernet card, electrical (G081 required)

Maximum number of Ethernet option cards	One Ethernet option card per mainframe, cannot be combined with 1-G064
Network interface	Up to two interfaces for each 1 Gbit or 10 Gbit/s (auto detection)
Network interface connector	RJ45 (10GBASE-T) using CAT6A or higher cable rating
Maximum cable length (10GBASE-T)	
CAT6A or higher	100 m (330 ft) at 10 Gbit/s
CAT6	55 m (180 ft) at 10 Gbit/s 100 m (330 ft) at 1 Gbit/s
CAT5e	100 m (330 ft) at 1 Gbit/s (not supported at 10 Gbit/s)
TCP/IP IPv4	
Address setup	DHCP/Auto IP or fixed IP
DHCP setup	When DHCP fails, the APIPA (Automatic Private IP Addressing) is used similarly to Windows® PCs
Gateway setup	Gateway setup supported for control through VPN and/or Internet
TCP/IP IPv6	Not supported
PTPv2 (IEEE1588:2008) synchronization	Not supported on Ethernet option cards
Wake-on-LAN	Not supported on Ethernet option cards
Multiple Ethernet use cases	PTPv2 (IEEE1588:2008) can be used on a separate (dedicated) Ethernet interface A combination of 10 Gbit and 1 Gbit Ethernet interfaces is supported
Maximum transfer speed	
Continuous recording to remote PC	400 MB/s(1)

(1) Tested using circular recording for 48 hours. Test setup uses a Windows® 7 PC with Intel i7 CPU and SSD with sustained write speeds exceeding 700 MB/s and a 10 Gbit Ethernet link.

KAB280: Fiber Optic Cable MM 50/125um LC-LC (Option, to be ordered separately)

Standard zipcord fiber optic duplex Multi Mode patch cable
Used with 850 nm optical 1 Gbit or 10 Gbit Ethernet (1-G062 and 1-G065), Master/ Slave synchronization and GN1202B cards. Typically used for fixed cable routing or LAB environments.

Figure 1.18: Block diagram and image

Connector type	LC - LC
Cable rating	OM3; Multi Mode, 850 nm
Core/Cladding diameter	50/125 µm
Jacket size/diameter	Typically 2 mm (0.08") single core
Jacket rating	Low-smoke zero-halogen
Attenuation	≤ 2.7 dB/km @ 850 nm
Available lengths	3, 10, 20 and 50 m (10, 33, 66 and 164 ft). For other lengths contact custom systems(1).
Bend radius	30 mm (1.2")
Weight	Typically 14 kg/km (9 lb/1000 ft)
Operating temperature	-40 °C to +80 °C (-40 °F to 176 °F)

(1) Contact custom systems at: customsystems@hbm.com

KAB288: Fiber Optic Cable SM 9/125um LC-LC (Option, to be ordered separately)

Standard zipcord fiber optic duplex Single Mode patch cable
Used with 1310 nm optical 1 Gbit or 10 Gbit Ethernet (1-G063 and 1-G066). Typically used for fixed cable routing or LAB environments.

Figure 1.19: Block diagram and image

Connector type	LC - LC
Cable rating	OS2; Single Mode, 1310 nm
Core/Cladding diameter	9/125 µm
Jacket size/diameter	Typically 2 mm (0.08") single core
Jacket rating	Low-smoke zero-halogen
Attenuation	≤ 0.5 dB/km @ 1310 nm
Available lengths	2, 10, 20, 50 and 100 m (6.6, 33, 66, 164 and 330 ft). For other lengths contact custom systems(1).
Bend radius	30 mm (1.2")
Weight	Typically 14 kg/km (9 lb/1000 ft)
Operating temperature	-40 °C to +70 °C (-40 °F to 158 °F)

(1) Contact custom systems at: customsystems@hbm.com

KAB289: Robust Fiber Optic Cable SM 9/125um LC-LC (Option, to be ordered separately)

Heavy duty fiber optic duplex Single Mode cable
Used with 1310 nm optical 1 Gbit or 10 Gbit Ethernet (1-G063 and 1-G066). Typically used for test cell environments.

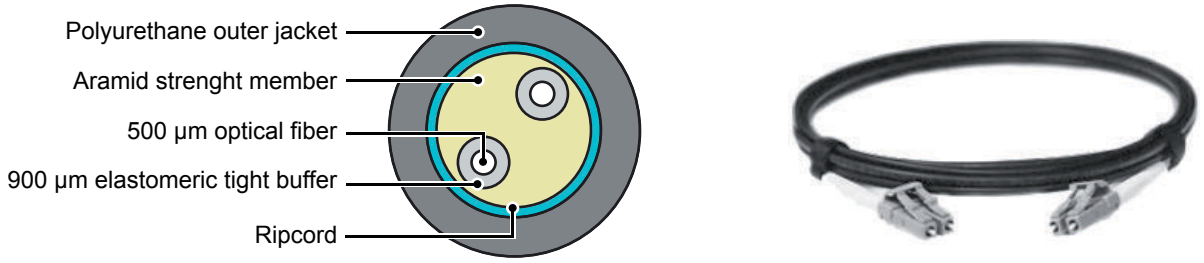

Figure 1.20: Block diagram and image

Connector type	LC - LC
Cable rating	OS2; Single Mode, 1310 nm
Core/Cladding diameter	9/125 µm
Jacket size/diameter	5.8 mm (0.23")
Jacket rating	Polyurethane, halogen free
Attenuation	≤ 0.5 dB/km @ 1310 nm
Available lengths	10, 20, 50, 100, 150 and 300 m (33, 66, 164, 328, 492 and 984 ft). For other lengths contact custom systems(1).
Bend radius	58 mm (2.3")
Crush resistance	2000 N/cm
Weight	Typcially 32 kg/km (21.5 lb/1000 ft)
Operating temperature	-46 °C to +85 °C (-50.8 °F to 185 °F)

(1) Contact custom systems at: customsystems@hbm.com

G070A: Torque/RPM Adapter (Option, to be ordered separately)

An external connection box to connect HBM's T12, T40B or any other RS422-based torque/RPM transducer directly to the GEN series mainframe Digital Event/Timer/Counter connector. Mainframe connection cable included.

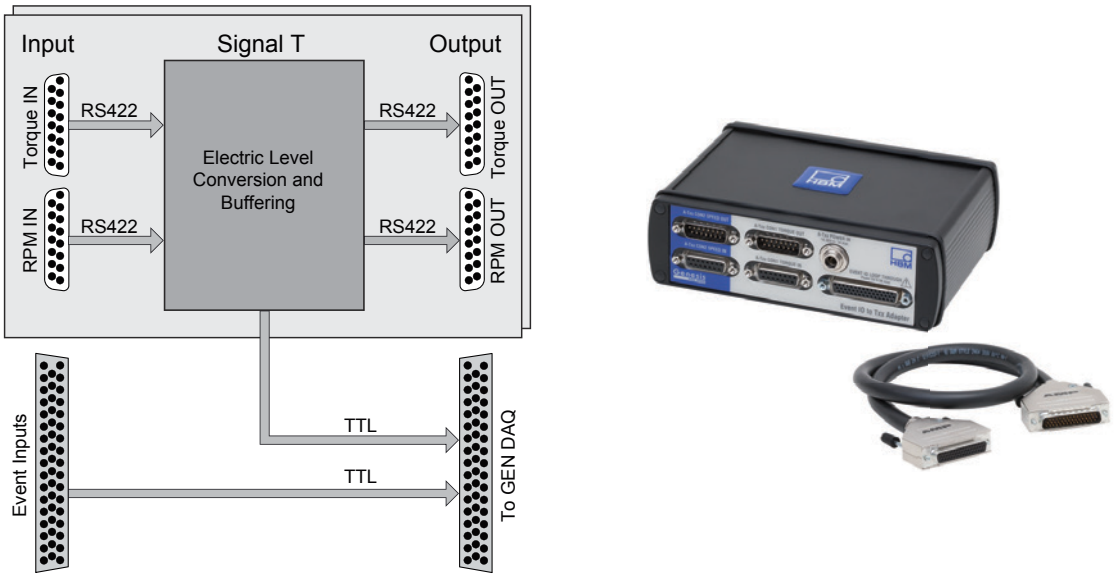

Figure 1.21: Block diagram and image

Torque sensor connection	
Number of torque sensors	2
Torque interface support	Torque and shunt (A-Txx CON1 Torque IN & B-Txx CON1 Torque IN)
Speed interface support	RPM, direction and reference (A-Txx CON2 Speed IN & B-Txx CON2 Speed IN)
Signal levels	Differential RS422
Signal termination	100 Ω
Torque sensor loop through	
Number of torque sensors	2
Torque interface output	Torque (A-Txx CON1 torque OUT & B-Txx CON1 torque OUT)
Speed interface output	RPM, direction and reference (A-Txx CON2 Speed OUT & B-Txx CON2 Speed OUT)
Output levels	Differential RS422, electronically retransmitted from input signals
Connectors	
Digital Event/Timer/Counter	HD22 sub-D 44 pin male (connection cable included)
Event I/O loop through connector	44 pin, female D-type connector, AMP HD-22 series (Tyco/TE Connectivity: 5748482-5)
Event I/O loop through cable connector	44 pin, male D-type connector, HDP-22 series (Tyco/TE Connectivity: 1658680-1), to be ordered separately
Torque, Speed/RPM interface IN	15 pin, female sub-D type connector (matches 1-KAB149-6 and 1-KAB163-6)
Torque, Speed/RPM interface OUT	15 pin, male sub-D type connector
Torque power input	Switchcraft L712A Matching cable connector Switchcraft 761KS17 (LD-024-1000911). Two cable connectors included

Note *For more details, please refer to data sheet "B4229 en GEN series G070A Torque/RPM adapter".*

G072: Isolated Digital Event Adapter (Option, to be ordered separately)

An external connection box to isolate all input and output signals used on the GEN series mainframe Digital Event/Timer/Counter connector. Adapter input connector pin compatible with mainframe input connector. Mainframe connection cable included.

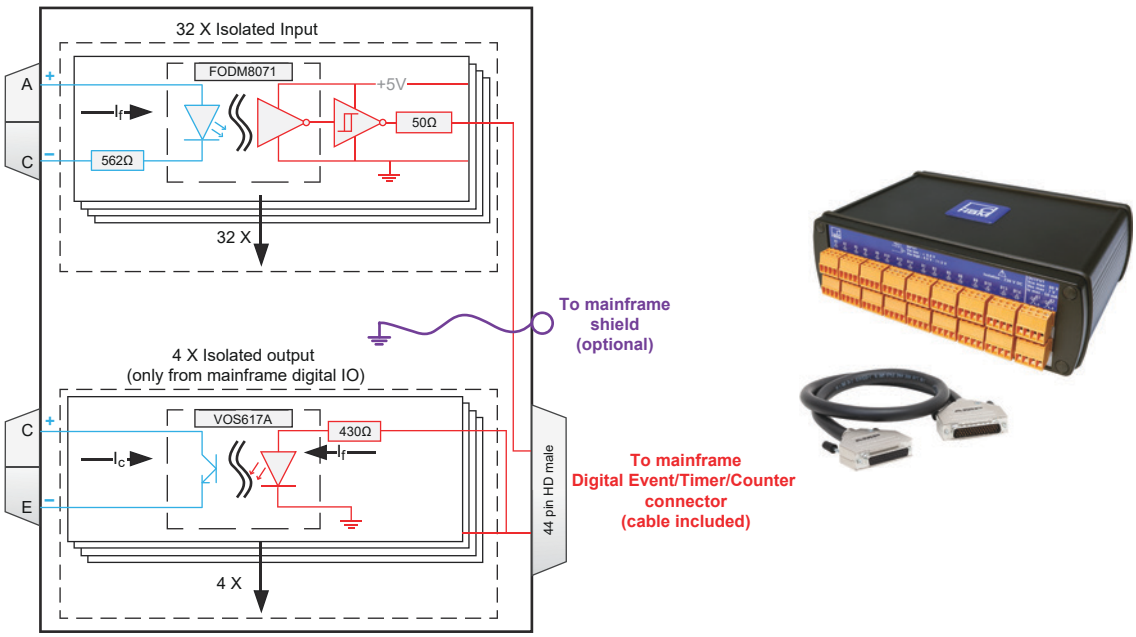

Figure 1.22: Block diagram and image

Event inputs	
Inputs	32 event channels (Anode, Cathode optocoupler with a 562 Ω series resistor)
Isolation voltage	230 V AC RMS or DC (channel to channel and channel to chassis/earth)
Isolation device	Fairchild FOD8071 optocoupler (or comparable)
Switching frequency	10 MHz input block signal tested. The highest frequency supported for the system is limited by the isolator box or acquisition system, whichever is the lowest.
Maximum propagation delay	55 ns
Common mode transient voltage	Typically 20 kV/µs
Input switching voltages	
Logic 0	< 1.0 V + 0.0015 A (562 Ω + R_{ext})
Logic 1	> 1.3 V + 0.0050 A (562 Ω + R_{ext}) (+100 V when R_{ext} = 20 kΩ)
Maximum nondestructive voltage	1.8 V + 0.0150 A (562 Ω + R_{ext}) (+300 V when R_{ext} = 20 kΩ)
Minimum nondestructive reverse voltage	-5.0 V
Event outputs	
Output channels	4 digital isolated output channels (open Collector, Emitter) Only supported by Digital Event/Timer/Counter connector
Isolation device	Vishay VOS617A optocoupler (or comparable)
Output frequency	170 kHz output signal tested. Maximum useable frequency for the system is limited by the Isolated Digital Event Adapter or acquisition system, whichever is the slowest.
Nondestructive control voltages	
Maximum voltage	0.007 * R_{ext} and < 80 V
Minimum voltage	-7.0 V

Note *For more details, please refer to data sheet “B4232 en GEN series G072 230 Volt RMS Isolated Digital Event adapter”.*

G001B: IRIG Receiver with PTP Output (Option, to be ordered separately)

External IRIG to PTPv2 convertor in a compact housing. Using the PTPv2 time source output GEN DAQ then synchronizes to IRIG time source. The solution comes as a complete package including cables, 19" rack mount kit and CD with user manual and installation instructions.

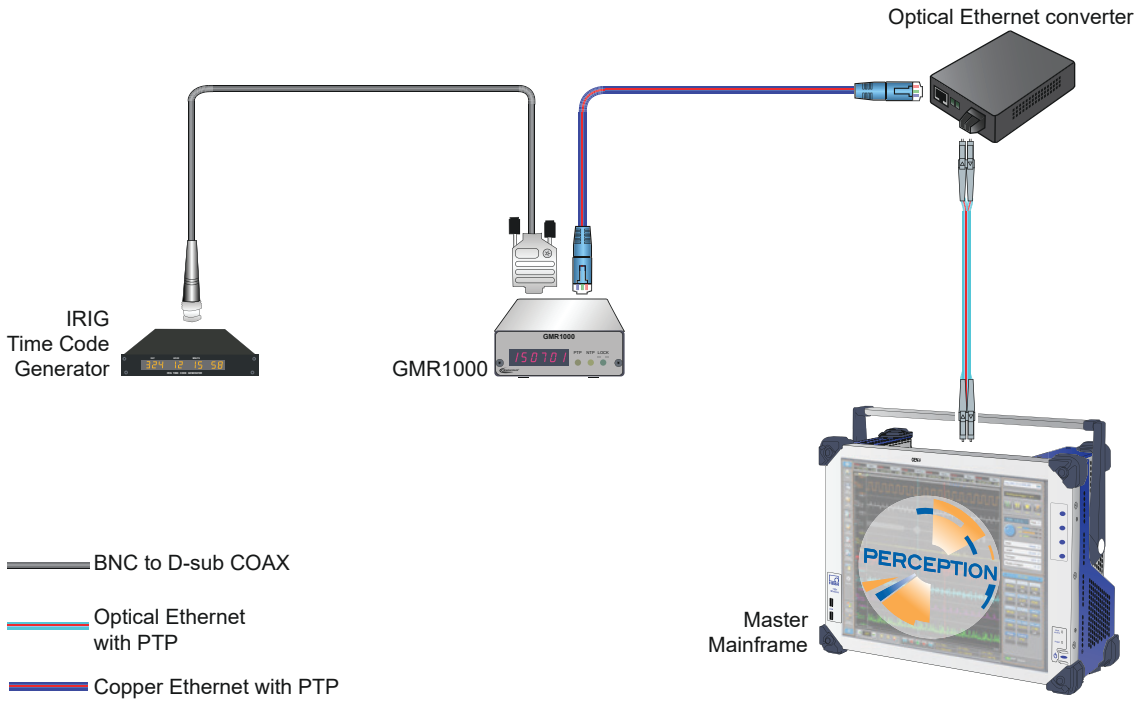

Figure 1.23: Example setup IRIG time synchronization

Included in G001B option	
IRIG receiver	GMR1000
IRIG input	2.5 m (8.2 ft) BNC to D-sub COAX
Ethernet cables	4.5 m (14.8 ft) CAT6 Ethernet cable to PoE adapter 20 m (65 ft) Fiber cable standard MM LC-LC 1-KAB280-20
Optical Ethernet converter	Converts the electrical Ethernet signal to an optical SFP Ethernet output signal.
Optical SFP	2 * G062 for optical Ethernet converter and GEN DAQ mainframe optical ethernet option
IRIG receiver GMR1000	
DC input	9-28 V DC
AC input	External wall mount power supply
Dimensions	164 mm (width) x 103 mm (height) x 36 mm (depth) (6.45" x 4.05" x 1.41")
Weight	0.45 kg (16 oz)
Rack mount	19", 1U height included
IRIG protocols supported	IRIG-B0 (DCLS), IRIG-B1 (AM), IRIG-A0 (DCLS), IRIG-A1 (AM), IRIG-E0 (DCLS), IRIG-E1 (AM)
Time synchronization accuracy	< 50 µs to IRIG time (Measured on GEN DAQ mainframe)
GEN DAQ series functions	Capture start of recording time Synchronize master time base oscillator frequency
Time required to full synchronization	
No recording active	< 1 min
Recording or pause active	< 1 min plus 25 s per ms recording time deviation from IRIG time source
Supported PTPv2 timing protocol	PTP according to IEEE1588-2008 (1 step, End-to-End, UDP, IPv4)

G002B: GPS Receiver with PTP Output (Option, to be ordered separately)

External GPS time synchronization using PTPv2 network communication.
The solution comes as a complete package, including a power over Ethernet (PoE) powered GPS antenna, all required RJ45 network cable, an outdoor RJ45 network surge protector, a PoE injector, two G062 SFPs and CD with user manual and installation instructions.

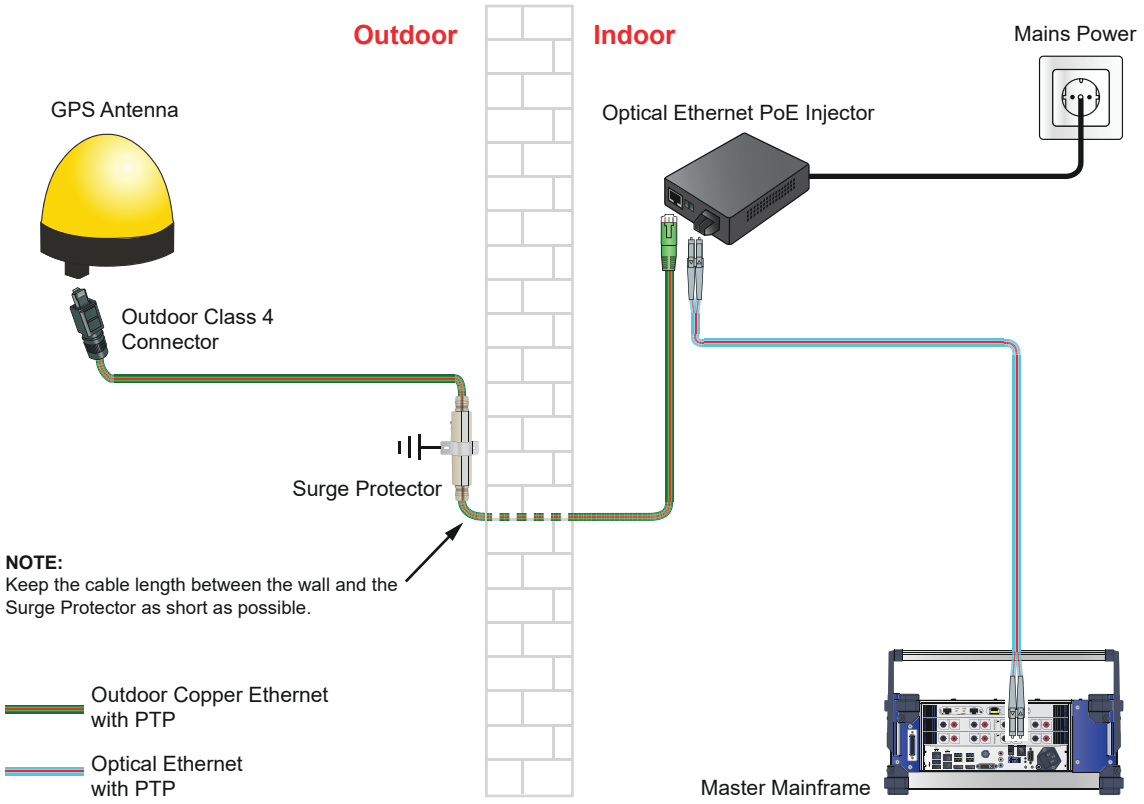

Figure 1.24: Example setup GPS time synchronization

Included in G002B option	
GPS antenna	OTMC 100
GPS antenna cables	50 m (164 ft) Outdoor CAT6 Ethernet cable to Surge Protector 20 m (65 ft) Outdoor CAT6 Ethernet cable to PoE adapter 20 m (65 ft) Fiber cable standard MM LC-LC 1-KAB280-20
Surge Protector	UL497B standard
Optical Ethernet PoE Injector	Power over Ethernet (PoE) injector. Supplies power to GPS antenna and converts the electrical Ethernet signal to an optical MM 50/125 um Ethernet output signal.
Optical SFP	2 * G062 for PoE injector and GEN DAQ mainframe optical ethernet option
GPS antenna safety	IEC60950-1:2005 2 Ed. +A1:2009 IEC60950-22:2005
GPS antenna connector	RJ45 waterproof connector according to IEC61076-3-106 (Variant 4)
Time synchronization accuracy	<150 ns to reference time (UTC) (Measured on GEN DAQ mainframe)
GEN DAQ series functions	Capture start of recording time Synchronize master time base oscillator frequency
GPS localization time	4 to 10 minutes after power on of antenna
Time required to full synchronization after GPS localization completed	
No recording active	<1 min
Recording or pause active	<1 min plus 25 s per ms recording time deviation from UTC time
User notifications while recording	Time marks on PTP time synchronization lost/restored, Mac Address of Master
Antenna Supported Timing Protocols PTPv2	PTP according to IEEE1588–2008 (1 step, End-to-End, UDP, IPv4)

Example Setup: GPS Receiver with Master/Slave Connected Systems

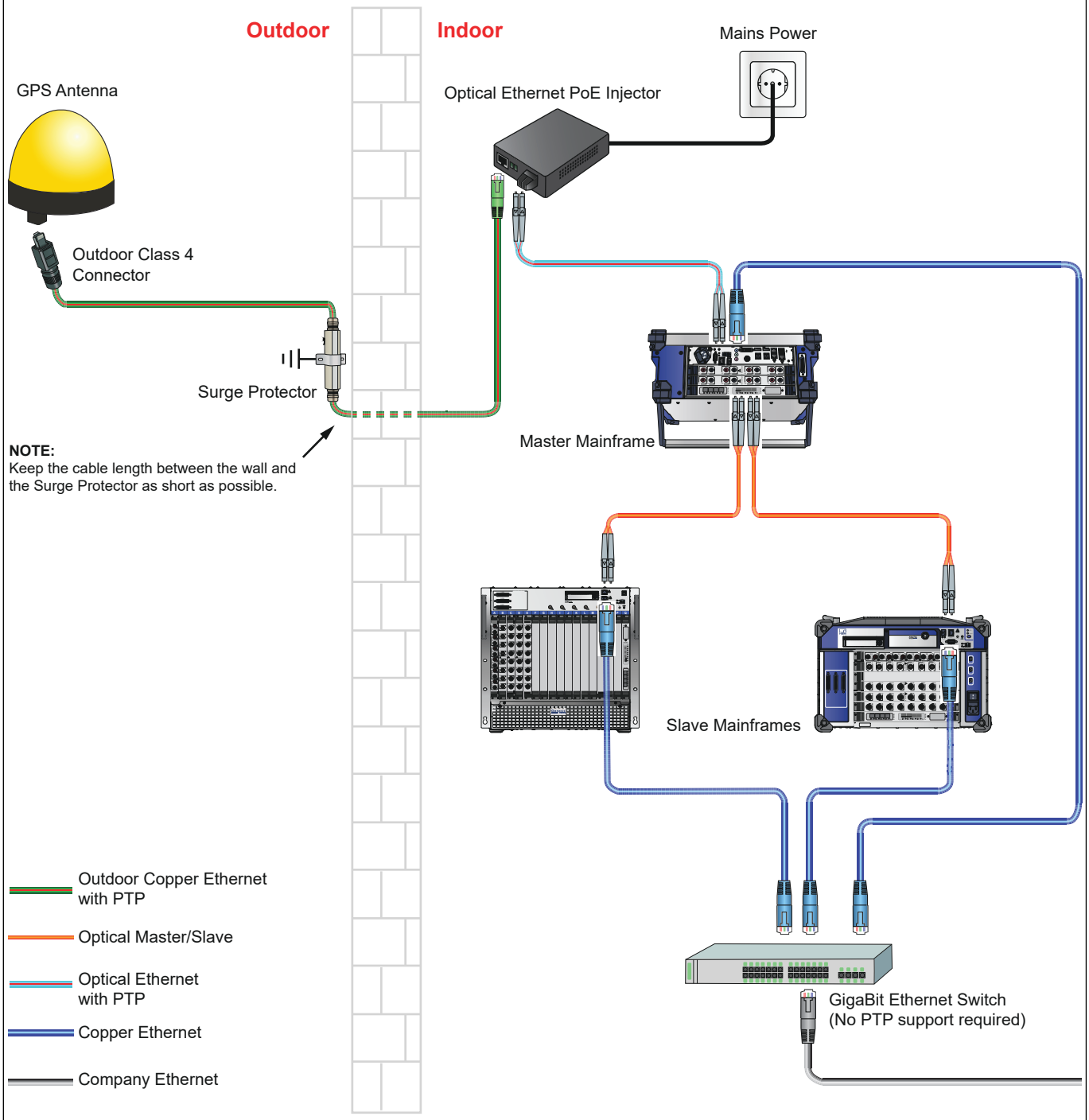

Figure 1.25: GPS setup for tethered mainframe with Master/Slave connected slaves

Example Setup: GPS Receiver with Tethered Mainframes and QuantumX

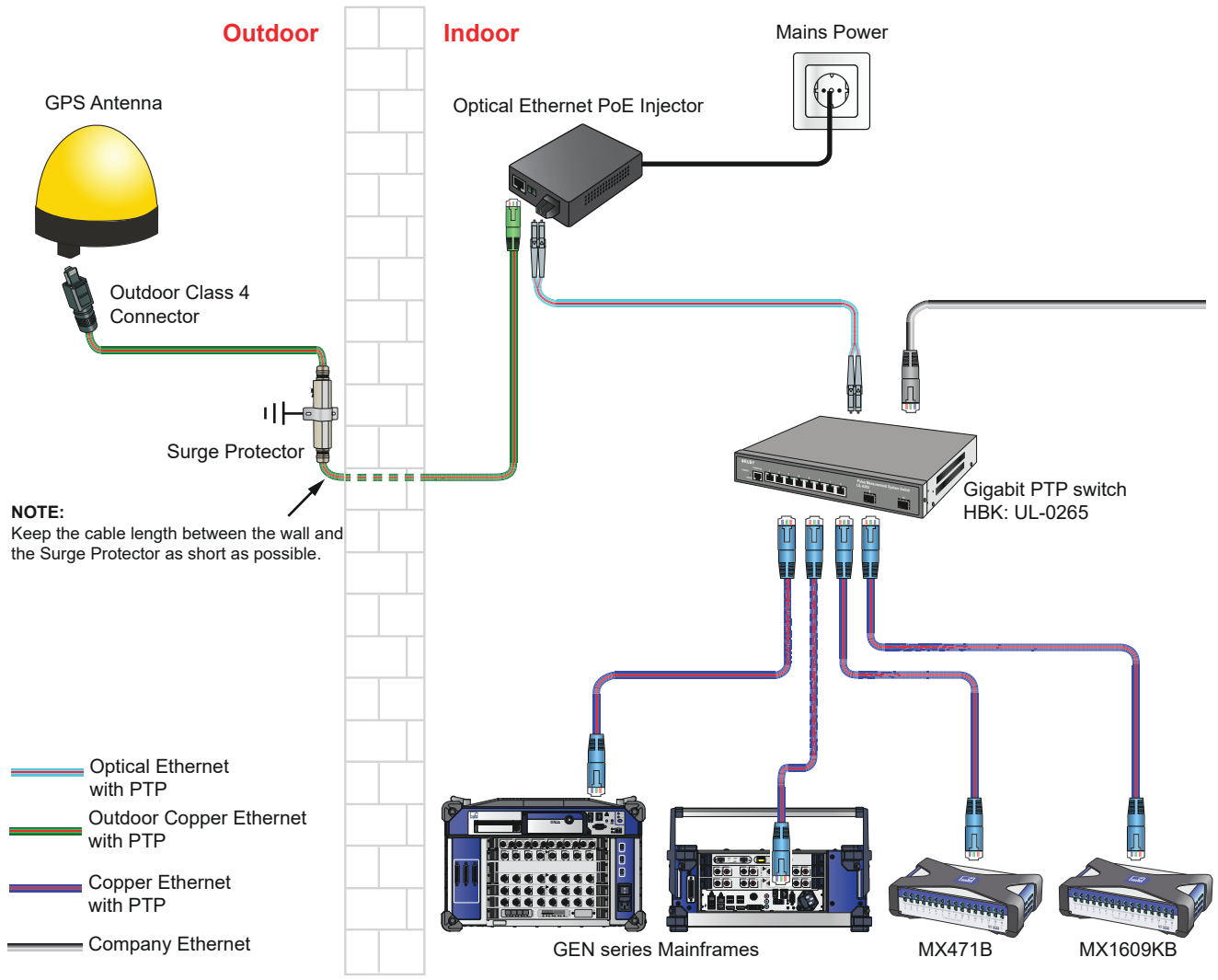

Figure 1.26: GPS setup for tethered mainframes and QuantumX

G054: Shipping Case (Option, to be ordered separately)

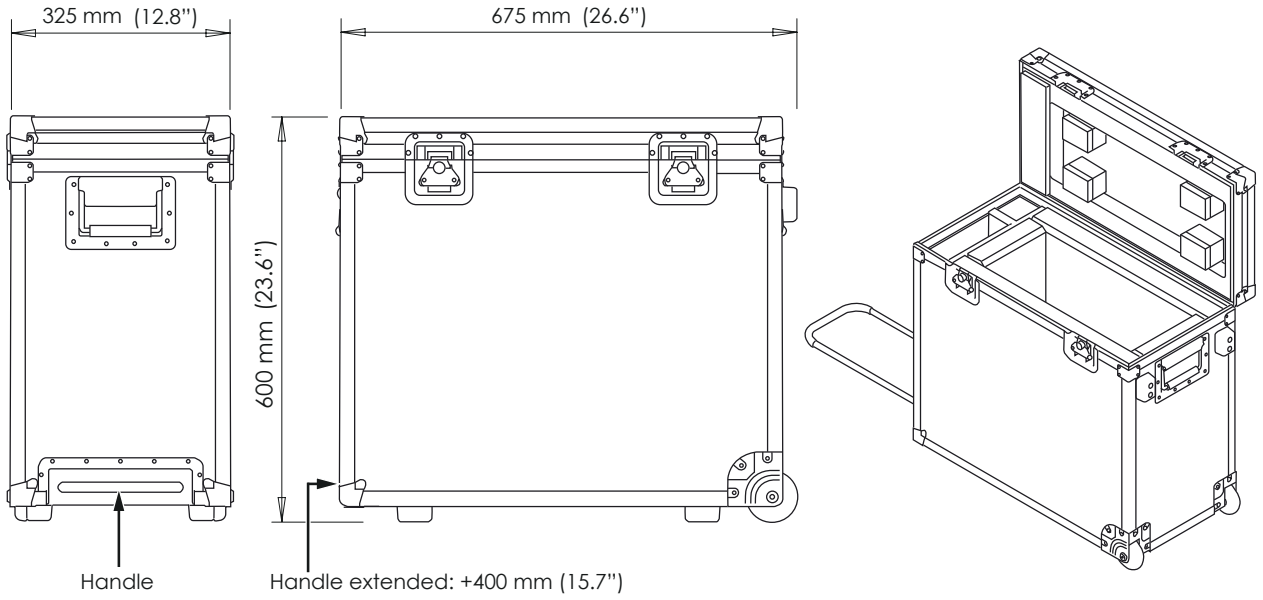

Figure 1.27: Reusable hardcover shipping case with wheels and transport handle

Outside Dimensions	600 mm (23.6") x 325 mm (12.8") x 675 mm (26.5") (HxWxD)
Weight Empty Case	16.5 kg (36.3 lb)
System Storage Area	Special area for system, slides in from the top for easy storage and easy removal from the shipment case. Protects the system from impact during drops, shocks and vibrations
Accessories Area	Separate area for keyboard, mouse, power cable and additional cables
Reliable Case Transport	Wheels and extendable handle constructed for stable transportation with a low gravitation point to prevent the case from tumbling in any direction during roll transport
Case Extras	Two lift handles and locks on side of the case for easy transport
Shock and Vibration	Tested with system inside case in accordance with ASTM D4728 E
Drop Test	Tested with system inside case in accordance with ASTM D4169-04 Level I

G071: Rack Mount Kit (Option, to be ordered separately)

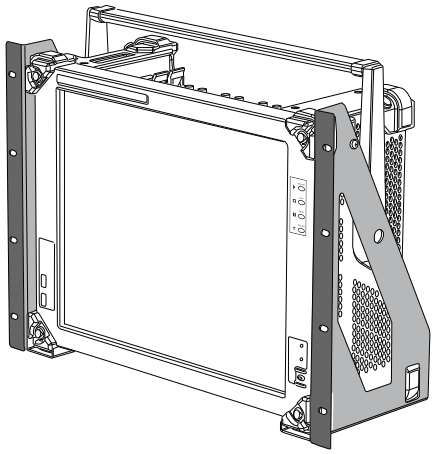

Figure 1.28: GEN3i Rack Mount Kit

Rack Mount Kit	Mounting a GEN3i mainframe in a standard 19” rack. Does not support the mouse and keyboard delivered with the GEN3i. Requires no additional mounting materials. User installed option.

Supported Acquisition Cards

Model	Type	Isolation	Maximum sample rate/ (not multiplexed)	Resolution	Memory/card	Analog Channels	Digital events	Timer/Counter channels	Streaming support	Slot width
GN310B	Balanced Differential	yes	2 M	18 bit	2 GB	6	16	2	fast	1
GN311B	Balanced Differential	yes	200 k	18 bit	2 GB	6	16	2	fast	1
GN610B	Balanced Differential	yes	2 MS/s	18 bit	2 GB	6	16	2	fast	1
GN611B	Balanced Differential	yes	200 kS/s	18 bit	200 MB	6	16	2	fast	1
GN815	Unbalanced Differential/ IEPE	yes	2 MS/s	18 bit	2 GB	8	16	2	standard & fast	1
GN816	Unbalanced Differential/ IEPE	yes	200 kS/s	18 bit	200 MB	8	16	2	standard & fast	1
GN840B	Bridge/IEPE/Charge/ 4-20 mA/PT100/PT1000/ Thermocouples	yes	500 kS/s	24 bit	2 GB	8	16	2	fast	1
GN1202B	Multi Mode Optical Fiber	yes	100 MS/s	--(1)	8 GB	12	16	2	fast	1
GN1640B	Bridge/IEPE/Charge/ 4-20 mA/PT100/PT1000/ Thermocouples	yes	500 kS/s	24 bit	2 GB	16	16	2	fast	2
GN3210	Differential/IEPE/Charge	no	250 kS/s	24 bit	2 GB	32	16	2	standard	1
GN3211	Differential	no	20 kS/s	16 bit	200 MB	32	16	2	standard	1
GN8101B	Single-ended	no	250 MS/s	14 bit	8 GB	8	16	2	fast	1
GN8102B	Single-ended	no	100 MS/s	14 bit	8 GB	8	16	2	fast	1
GN8103B	Single-ended	no	25 MS/s	14 bit	8 GB	8	16	2	fast	1

(1) This card supports up to 12 optical fiber transmitter channels.

Optical Fiber Transmitter Channels

Transmitter
Every transmitter is a single channel unit. Every unit has an unbalanced differential input, amplifier, analog anti-alias filter and ADC with an optical data and control link to the receiver card. The receiver card has the recording logic, sample rate selection and memory.

Model	Receiver card	Power	Sample rate	Resolution	Isolation
GN110	GN1202B	Battery	100 MS/s	14 bit	User application defined
GN111	GN1202B	Battery	25 MS/s	15 bit	User application defined
GN112	GN1202B	120/240 V AC	100 MS/s	14 bit	1800 V RMS
GN113	GN1202B	120/240 V AC	25 MS/s	15 bit	1800 V RMS

Mainframe Feature Overview

	Tethered models				Integrated models	
	GEN2tB	**GEN4tB**	**GEN7tA**	**GEN17tA**	**GEN3i**	**GEN7i**
Number of acquisition cards	2	4	7	17	3	7
Built-in TFT screen (resolution)	Not Supported				17" (1280x1024)	17" (1280x1024)
Built-in Windows® PC	Not Supported				Intel© i5, 8 GB RAM	Intel© i7, 16 GB RAM
Portable	ultra portable	portable	transporta-ble	Not Supported	portable	transporta-ble
Rack mount support (Option)	yes					
Built-in storage drive	option 500 GB	option 500 GB	Not Supported		480 GB	960 GB
Removable built-in storage drive	Not Supported		option 960 GB EXT4		Not Supported	option 960 GB NTFS
Built-in drive continuous streaming rate	200 MB/s	350 MB/s			200 MB/s	350 MB/s
1 GB Ethernet Continuous streaming rate	100 MB/s					
10 GB Ethernet Continuous streaming rate	NS(1)	400 MB/s				
IEEE1588:2008 PTPv2 support	yes					
Digital events	up to 32	up to 64	up to 96	up to 96	up to 32	up to 96
USB ports	1	2	0		8	
1 GB Ethernet (RJ45)	1				4	
Master/Slave synchronization connector	SFP option		Standard included			
DC power output (QuantumX compliant)	NS(1)	NS(1)	30 W	NS(1)	15 W	30 W
Mechanical	**GEN2tB**	**GEN4tB**	**GEN7tA**	**GEN17tA**	**GEN3i**	**GEN7i**
Air filter	yes				no	yes
Weight without acquisition cards (kg)	4.0	8.0	10.9	18.9	9	15.7
Dimensions (height / width / depth [mm])	96/375/320	133/441/345	293/448/343	450/446/517	342/436/186	350/446/386
19" Rack mount	option					
Shipping case	option			no	option	
Option overview	**GEN2tB**	**GEN4tB**	**GEN7tA**	**GEN17tA**	**GEN3i**	**GEN7i**
IRIG time synchronization (G001B)	option					
GPS time synchronization (G002B)	option					
Option carrier card support (G081)	option					
Master output card (G083)	option					
10 GB Ethernet optical (G064)	NS(1)	option				
10 GB Ethernet electrical (G084)	NS(1)	option				
EtherCAT® real-time output	NS(1)	option			Not Supported	
CAN FD semi real-time output	option				Not supported	
Software	**GEN2tB**	**GEN4tB**	**GEN7tA**	**GEN17tA**	**GEN3i**	**GEN7i**
Included Perception package	Standard				Advanced	Enterprise
GEN DAQ API remote control	yes				no	no
Perception API remote control	yes					
Perception CSI (custom special software)	option					

(1) NS: Not supported

Perception Versions

Features	Viewer (no copy protection)	Viewer Enterprise	Standard (no copy protection)	Advanced	Enterprise
True 64 bit support	✔	✔	✔	✔	✔
Basic review, y/t and x/y displays	✔	✔	✔	✔	✔
Horizontal, vertical and slope cursors	✔	✔	✔	✔	✔
Trace and display markers	✔	✔	✔	✔	✔
Interactive waveform calculator	✔	✔	✔	✔	✔
Interactive user keys	✔	✔	✔	✔	✔
Quick report to Microsoft® Word and Excel	✔	✔	✔	✔	✔
Automation and log-file	✔	✔	✔	✔	✔
Export to ASCII, Excel, imPression, RTPro, TEAM data	✔	✔	✔	✔	✔
Analysis functions/Formula Database	✘	✔	✘	✔	✔
Advanced Report	✘	✔	✘	✔	✔
Advanced Export adds 15 additional formats MATLAB, DIAdem, Flexpro, Famos, UFF58 etc.	✘	✔	✘	✔	✔
Synchronized Video Playback	✘	✔	✘	✔	✔
Multiple Workbooks (Monitors)	✘	✔	✘	✔	✔
Information sheet to add recording meta data	✘	✔	✘	✔	✔
Single mainframe control	✘	✘	✔	✔	✔
Multiple mainframe control(1)	✘	✘	✘	✘	✔
Macro editor for user keys and automation	✘	✔	✘	✘	✔
Basic FFT	✘	✔	✘	✘	✔
Sensor Database	✘	✔	✘	✘	✔
User/Definer Mode	✘	✔	✘	✘	✔
Application packages					
Custom Software Interface	✘	Cost option	✘	Cost option	Cost option
STL Analysis (Short-Circuit Testing Liaison methods)	✘	Cost option	✘	Cost option	Cost option
HV-IA Lightning, Switching and Current impulse analysis (IEC60060-1 and IEC61083-2)	✘	Cost option	✘	Cost option	Cost option
eDrive electrical motor/inverter/generator and drive analysis	✘	Cost option	✘	✘	Cost option

(1) The maximum number of mainframes Perception can control is calculated by using 25% of PC memory divided by 50 MB FIFO required per mainframe. Minimum suggested configuration is a PC with 64 bit Windows® and 8 GB of memory.

Perception Remote Control (Free of Charge)

Perception remote control is based on DCE/RPC network communication standards (Distributed Computing Environment/Remote Procedure Calls, free of charge). The source code supplied by HBM can be compiled on many different operating systems. For ease of use in the Microsoft®.NET environment a COM interface is created on top of the basic DCE/RPC interface. An extensive help file is available to explain interface calls offered in this API.

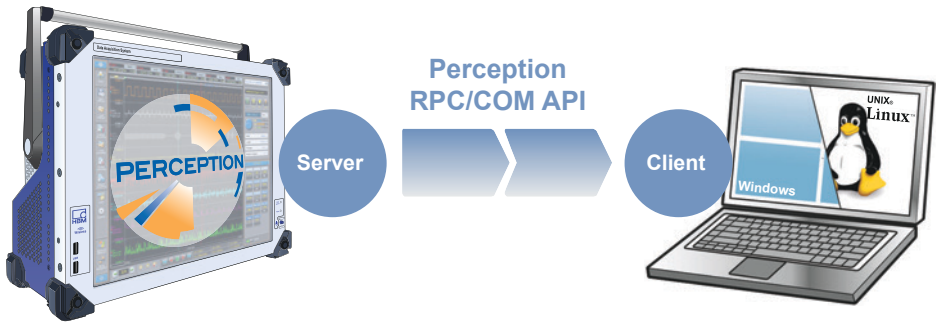

Figure 1.29: Functional diagram DCE/RPC

Functions	Control Perception software from an external computer/application on Windows®, Linux, Unix or Mac OS X
COM interface	All RPC commands have a COM wrapper for easier Windows® software integration
Available basic commands	Load and save Perception setup files, Setup Recording, set and review Hardware Settings, Start/Stop/Pause/Trigger, monitor Live data
Examples (free of charge)	C++ and C# getting started example programs supplied for Windows®, source code included. Unsupported Linux getting started example by request only.
LabVIEW™ integration (free of charge)	LabVIEW™ RPC/COM getting started examples available on www.hbm.com
DIAdem™ integration (free of charge)	DIAdem™ RPC/COM getting started examples available on www.hbm.com

PNRF Recording File Reader (Free of Charge)

HBM maintained file reader to read the proprietary PNRF format. (Perception Native Recording File) Integrated by several industry standard analysis package suppliers. Available for all 3rd party software developers.

Figure 1.30: Functional diagram PNRF Reader

Functions	Read PNRF, NRF and LRF recording files directly in your own application
COM interface	The PNRF reader comes as a COM interface and can be used from any application or programming language which supports COM automation
PNRF Software Development Kit (SDK)	Installs PNRF dll's and supplies Visual Basic, C# and C++ getting started examples
GlyphWorks® integration	PNRF SDK integrated and available directly from HBM nCode
MATLAB® integration	PNRF SDK installs both MATLAB® PNRF reader and getting started examples
LabVIEW™ integration	PNRF SDK integrated and available directly from National Instruments
DIAdem™ integration	PNRF SDK integrated and available directly from National Instruments
FlexPRO integration	PNRF SDK integrated and available directly from Weisang GmbH
jBEAM™ integration	PNRF SDK integrated and available directly from AMS
DynaWorks® integration	PNRF SDK integrated and available directly from Intespace

Perception CSI (Customer Software Interface)

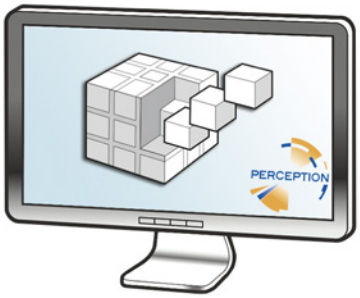

Figure 1.31: Perception CSI building blocks

Functions	Create software extensions inside the Perception software by adding CSI user sheets, custom automation and extended analysis functions. Basic Windows C# sheet template included. Available for all languages that support Microsoft®.NET 4.
Available basic controls & commands	Access to every Perception part: Start/Stop/Pause and Trigger, Start Manager, Acquisition System, Hardware Settings, Displays, Meters, User Tables, Formulas, Calculations, Data Manager, Data Sources, User variables, Notifications, Logging, Conversion Functions, Automation Actions, Sheet Manager and more, to create a dedicated application GUI that hides the entire Perception standard GUI.
Examples (free of charge)	C# getting started example programs supplied, source code included

Perception API and CSI Training/Support Program

Figure 1.32: Perception targeted training

HBM offers paid professional training and support programs on all API interfaces (PNRF reader, RPC and CSI). Training programs are based on C#, are on-site or are at a central HBM location. On-site training can be specific for each customer. Support can be the development of a fully customized software application or answering questions from software engineers.	
S-TRAIN1-GEN_PERC	First day on-site basic training on GEN DAQ/PERCEPTION. Example content: Basic usage, hardware setup, acquisition. Training can be customized for specific training needs.
S-TRAIN2-GEN_PERC	Second day on-site enhanced training on GEN DAQ/PERCEPTION. Training can be customized for specific training needs.
S-TRAIN1-eDRIVE	First day on-site basic training on eDrive application specifics. Example content: Basic usage, hardware setup, acquisition. Training can be customized for specific training needs.
S-TRAIN2-eDRIVE	Second day on-site enhanced training on eDrive application specifics. Training can be customized for specific training needs.
1-PERC-CSI-TRAIN	Two day on-site Perception CSI training for software programmers During the training software programmers learn how to get started using the CSI template, make changes to the Perception user interface, to add new mathematical routines to the Formula Database or to add User Keys etc. The exact training details can be fully customized to the programmers needs including reviews and examples how to create the exact CSI changes of choice. Basic Microsoft® Visual Studio software C# programming skills are required before joining this training. More dedicated detailed training is available on request.
1-PERC-CSI-PROJ	One day eMail/Phone support for Perception CSI or RPC programmers. Get support from a HBM senior software engineer. Support can range anywhere from answering "how-to" question, assisting in analysing any kind of (performance) issue to generating basic getting started example code fragments.

Ordering Information

Article		Description	Order No.
GEN3i		GEN3i rugged, portable data recorder.(1) The integrated instrument has three acquisitions slots, a 200 MB/s streaming rate, one Master/ Slave connector, an integrated PC, the Windows® 10 PRO, 64 bit version. 17 inch touch screen TFT, 480 GB Solid State Drive, mouse, keyboard, carrying bag with integrated protective front cover. Includes Perception Advanced software package.	1-GEN3i
GEN3i plus one Iso1kV200k card		GEN3i - 6 channel Iso1kV200k package. Same as GEN3i plus one 1-GN611B; 6 channels, 1 kV isolated balanced differential inputs, 200 kS/s, 128 MB RAM cards.	1-GEN3i6
GEN3i plus two Iso1kV200k cards		GEN3i - 12 channel Iso1kV200k package. Same as GEN3i plus two 1-GN611B; 6 channels, 1 kV isolated balanced differential inputs, 200 kS/s, 128 MB RAM cards. (12 channels altogether).	1-GEN3i12
GEN3i plus three Iso1kV200k cards		GEN3i - 18 channel Iso1kV200k package. Same as GEN3i plus three 1-GN611B; 6 channels, 1 kV isolated balanced differential inputs, 200 kS/s, 128 MB RAM cards. (18 channels altogether).	1-GEN3i18
GEN3i eDrive package		The GEN3i eDrive package is an "all inclusive" solution for testing electrical motors, generators, and inverters. It combines the continuous long term storage of electrical (current and voltages) and mechanical signals (torque and speed) with "power analyzer-like" LIVE calculation, display and logging of power quantities like true power, apparent power, reactive power, power factor and efficiency. The package consists of one 1-GEN3i mainframe, one 1-PERC-OP-EDR-01 Perception eDrive application extension, two 1-GN610B acquisition cards, two 1-GEN-OP-RTFDB real-time formula databases, one 1-G068 artificial star adapter, one 1-G070A Torque/RPM adapter.	1-EDRIVE-GEN3i

(1) The layout of the keyboard delivered with GEN3i can be in English, German, French, Chinese or Japanese. Specify when ordering.

Options, to be ordered separately			
Article		**Description**	**Order No.**
1 Gbit Optical Network SFP module 850 nm	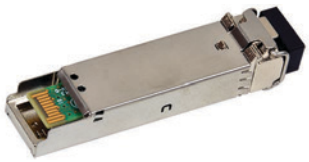	GEN DAQ 1 Gbit Ethernet SFP, 850 nm Multi Mode, up to 500 m optical cable length supported, LC connector support. 1 Gbit SFP modules are not compatible with the 10 Gbit SFP+ modules.	1-G062
1 Gbit Optical Network SFP module 1310 nm		GEN DAQ 1 Gbit Ethernet SFP, 1310 nm Single Mode, up to 10 km optical cable length supported, LC connector support. 1 Gbit SFP modules are not compatible with the 10 Gbit SFP+ modules.	1-G063
Option carrier card		The option carrier card enables the use of two option cards within the GEN2tB, GEN3i, GEN3iA, GEN4tB, GEN7i, GEN7tA and GEN17tA mainframes. Multiple option carrier cards are supported. Option cards enable the use of synchronization, field busses and 10 Gbit Ethernet.	1-G081
Master output card		Factory installed, option carrier card (G081) required. The Master output card supports the use of four Slave mainframes. Up to two Master output cards are supported per option carrier card. Multiple option carrier cards supported per mainframe. Compatible with Master/Slave card (1-G040) and mainframe Master/Slave synchronization.	1-G083
10 Gbit Ethernet card, optical		Factory installed, option carrier card (G081) required. The optical 10 Gbit Ethernet card adds up to two extra 10 Gbit Ethernet network interfaces to a GEN DAQ series mainframe. Supports up to 400 MB/s continuous data transfer from the GEN DAQ mainframe to a suitable PC. Requires a 10 Gbit optical network SFP+ module.	1-G064
10 Gbit Optical Network SFP+ module 850 nm	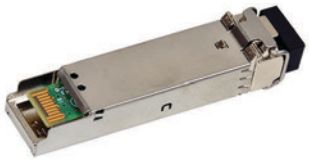	GEN DAQ 10 Gbit Ethernet SFP+, 850 nm Multi Mode, up to 82 m optical cable length supported, LC connector support. 10 Gbit SFP+ modules are not compatible with the 1 Gbit SFP modules.	1-G065
10 Gbit Optical Network SFP+ module 1310 nm		GEN DAQ 10 Gbit Ethernet SFP+, 1310 nm Single Mode, up to 10 km optical cable length supported, LC connector support. 10 Gbit SFP+ modules are not compatible with the 1 Gbit SFP modules.	1-G066
10 Gbit Ethernet card, electrical		Factory installed, option carrier card (G081) required. The electrical GEN DAQ 10 Gbit Ethernet card adds up to two extra 10 Gbit Ethernet network interfaces to a GEN DAQ series mainframe. Supports up to 400 MB/s continuous data transfer from the GEN DAQ mainframe to an appropriate PC.	1-G084

Time Synchronization Options, to be ordered separately			
Article		**Description**	**Order No.**
IRIG to PTPv2 convertor		External IRIG to PTPv2 convertor in a compact housing. Using the PTPv2 time source output GEN DAQ then synchronizes to IRIG time source. The solution comes as a complete package including cables, 19" rack mount kit and CD with user manual and installation instructions.	1-G001B
GPS to PTPv2 receiver		External GPS time synchronization using PTPv2 network communication. The solution comes as a complete package, including a power over Ethernet (PoE) powered GPS antenna (OTMC 100i), a 50 m (164 ft) IP67 CAT6 outdoor RJ45 network cable, an outdoor RJ45 network surge protector (PD-OUT/SP11), a 20 m (65 ft) CAT6 RJ45 network cable, a RJ45 to Optical SFP convertor with PoE injection on the RJ45 network, two G062 SFPs (For GEN DAQ SFP network and the SFP convertor), a KAB280-10 optical cable and CD with user manual and installation instructions.	1-G002B
Gbit PTP ethernet switch		UL-0265 is a 10/100/1000 Mbps network switch with IEEE1588:2008 PTPv2 time synchronization and PoE (Power over Ethernet) support. The switch is pre-configured for plug and play use on both IPv4 PTP used by GEN DAQ systems as well as PoE output for 8 devices. For systems using IPv6 PTP, the switch can be reprogrammed. UL-0265 has a built-in 100 to 240 V AC, 50 to 60 Hz mains power supply.	UL-0265

Accessories, to be ordered separately			
Article		**Description**	**Order No.**
GEN2i/GEN3i 19 inch rack mount kit		GEN2i/GEN3i rack mount kit (does not include mouse and keyboard mounting kits). User installed option.	1-G053
Torque/RPM adapter		Converts the differential signaling used by HBM torque transducers to TTL signal levels used by the Timer/Counter A and B available on the Digital Event/Timer/Counter connector of GEN DAQ mainframes. Both Torque and Speed are interfaced separately for 2 torque sensors. Event output connected to Shunt control. All remaining event TTL signals available on output connector. Comes with 0.7 m (2.3 ft) cable to connect adapter to the mainframe. Torque transducer cables not included.	1-G070A
Isolated digital event adapter		230 V RMS Isolated Digital Event adapter. Supports 32 channel to channel isolated digital event inputs. The inputs can either be used to connect to the GEN series mainframes that support the Digital Event/Timer/Counter connector. Input connectors and cable to connect to the GEN series mainframe are included.	1-G072
GEN2i/GEN3i/ GEN3t shipping case		GEN2i/GEN3i/GEN3t shipping case with wheels and handle. Tested in accordance with ASTM D4169-04 Level I (drop), and ASTM D4728 E (vibration & shock) Gross weight (empty) 16.5 kg (36.3 lb).	1-G054
Fiber cable MM LC-LC		GEN DAQ standard zipcord fiber optic duplex Multi Mode 50/125 µm cable, 3.0 dB/km loss, LC-LC connectors, aqua, ISO/IEC 11801 type OM3. Typically used for fixed cable routing or LAB environments. Lengths: 3, 10, 20 and 50 meters (10, 33, 66 and 164 ft) Used with 850 nm optical 1 Gbit or 10 Gbit Ethernet (1-G062 and 1-G065), Master/Slave synchronizations and GN1202B cards.	1-KAB280-3 1-KAB280-10 1-KAB280-20 1-KAB280-50
Fiber cable SM LC-LC		GEN DAQ standard zipcord fiber optic duplex Single Mode 9/125 µm cable, 0.5 dB/km loss, LC-LC connectors, yellow, ISO/IEC 11801 type OS2. Typically used for fixed cable routing or LAB environments. Lengths: 2, 10, 20, 50 and 100 meters (6.5, 33, 66, 164 and 328 ft) Used with 1310 nm optical 1 Gbit or 10 Gbit Ethernet (1-G063 and 1-G066).	1-KAB288-2 1-KAB288-10 1-KAB288-20 1-KAB288-50 1-KAB288-100
Robust fiber cable SM LC-LC		GEN DAQ heavy duty fiber optic duplex Single Mode 9/125 µm cable, 0.5 dB/km loss, LC-LC connectors, black, ISO/IEC 11801 type OS2. Typically used for test cell environments. Lengths: 10, 20, 50, 100, 150 and 300 meters (33, 66, 164, 328, 492 and 984 ft) Used with 1310 nm optical 1 Gbit or 10 Gbit Ethernet (1-G063 and 1-G066).	1-KAB289-10 1-KAB289-20 1-KAB289-50 1-KAB289-100 1-KAB289-150 1-KAB289-300

Accessories, to be ordered separately			
Article		**Description**	**Order No.**
I/O BNC Breakout cable		BNC breakout cable for direct BNC cable connection to the 9-pin D-sub I/O connector	1-KAB2132-0.5

Note *Other fiber cable lengths can be ordered from custom systems at:* customsystems@hbm.com

Software Options, to be ordered separately[1]			
Article		**Description**	**Order No.**
Perception Advanced	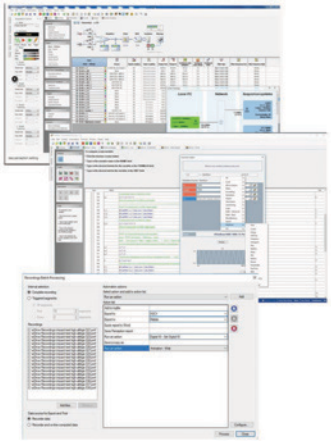	For setup and control of a single GEN series mainframe. Includes real-time live and recorded data review using y/t and x/y displays. Y/t displays support vertical, horizontal and slope cursors, trace and display markers as well as an interactive waveform calculator. On top Perception allows synchronized video playback. For data analysis Perception supports interactive user keys, Formula Database with waveform and math calculators. To create a report of the recorded and analysis data Perception supports adding additional meta data describing your test details, quick report to Microsoft Word® and Excel®, an advanced built-in report engine. If analysis in third party software is preferred 20 export format (Including MATLAB, DIAdem, MDF4/ASAM, UFF58 and more) are supported. For automated analysis, reporting or data exports Perception supports extensive automation and result logging features. Default Perception supports 64 bit versions of Windows® 7, 8 and 10. A 32 bit can be downloaded from the HBM website.	1-PERC-AD-01
Perception Enterprise	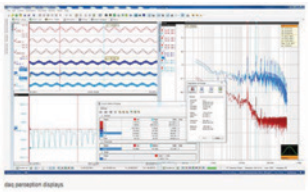	Perception Advanced with additionally: Macro editor, Basic FFT, Sensor Database, User Definer Mode and Multi Mainframe Control.	1-PERC-E64-01
Perception Viewer Enterprise		Same as Perception Enterprise without mainframe setup and control.	1-PERC-VA-01
CSI Interface	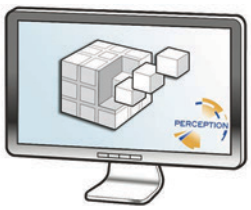	Allows for the development of and running CSI programs.	1-PERC-OP-CSI-01
STL Analysis	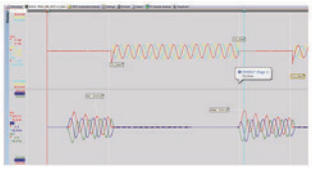	Special analysis routines in accordance with the STL standard used in LV, MV and HV labs. Includes import of TDG data (Test Data Generator) for verification. Includes HighPower/HighVoltage automated analysis. Evaluates data from NoLoad, ShortCircuit, Capacitive and Synthetic tests of HV/MV switchgear devices.	1-PERC-OP-STL-01
HV-IA	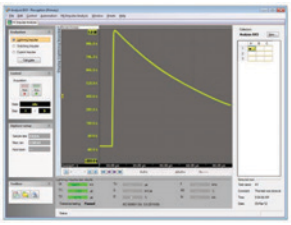	High Voltage Impulse Analysis option; evaluates Lightning, Switching and Current impulses; designed in accordance with IEC60060-1 and IEC61083-2 requirements. Allows for evaluation with new k-factor method.	1-PERC-OP-HIA-01
eDrive		Allows for easy and application oriented setup and efficiency calculations of electrical inverter/ drive tests with minimum interaction. Requires Perception Enterprise.	1-PERC-OP-EDR-01

(1) Software options are also sold in a package with multiple single seat licenses and multiple seat network license.

©Hottinger Baldwin Messtechnik GmbH. All rights reserved.
All details describe our products in general form only.
They are not to be understood as express warranty and do
not constitute any liability whatsoever.

Hottinger Baldwin Messtechnik GmbH

Im Tiefen See 45 · 64293 Darmstadt · Germany
Tel. +49 6151 803-0 · Fax: +49 6151 803-9100
E-mail: info@hbm.com · www.hbm.com

measure and predict with confidence

B03762_07_E00_00 HBM: public