Documentation folder

Number **TC10862-1**
Project number SO16202870

Number	Pages	Description	Remark
10862/0-01	1	Block diagram	-
10862/0-02	3	DPG-Series datasheet	Tilt sensor datasheet
10862/0-03	3	Lay-out of CPU-board	Including partslist
10862/0-04	4	Lay-out of ADM (A/D) board	Including partslist
10862/0-05	1	Display	-
10862/0-06	1	Housing without display	-
10862/0-07	1	Housing with display	-
10862/0-08	1	Sealing of instrument	-
10862/0-09	1	Sealing of connections tilt sensor	Connected to serial port KL3

Certification Documentation

WTX120

Legal-for-trade weighing terminal

Block diagram essential and conditional parts

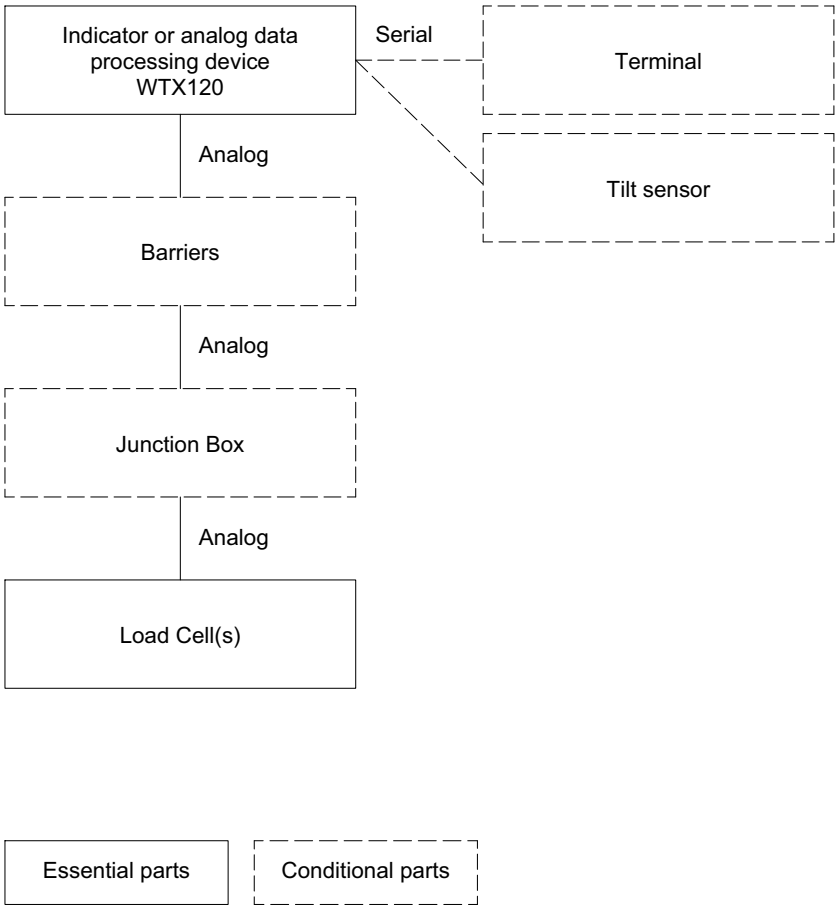

B4651-1.0 en 11.2016 HBM: business

4 Mechanics and Connections

4.1 Mounting

For operation this inclinometer has to be mounted horizontally (see Fig. 4.1), reference is the base plate.

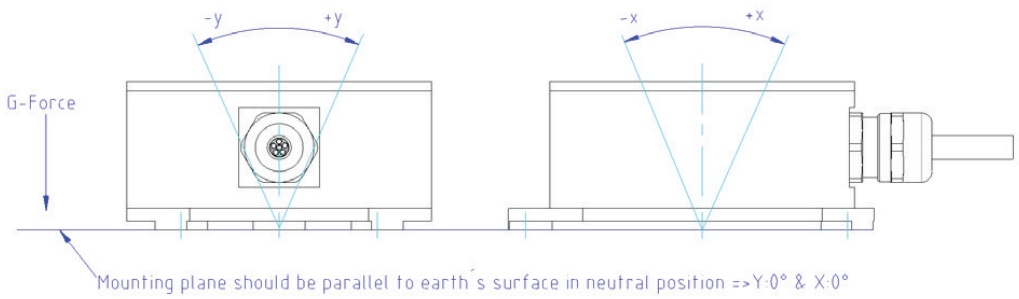

Fig. 4.1 Mounting position of sensor module & inclination axis

4.2 Mechanical data

Parameter	Symbol	Conditions	Min	Typ	Max	Unit
Weight				280		g
Dimensions		W x D x H		84 x 70 x 31		mm
Protection class				IP 67		

4.3 Dimensions

The mechanical dimensions of the module are shown in Fig. 4.2.

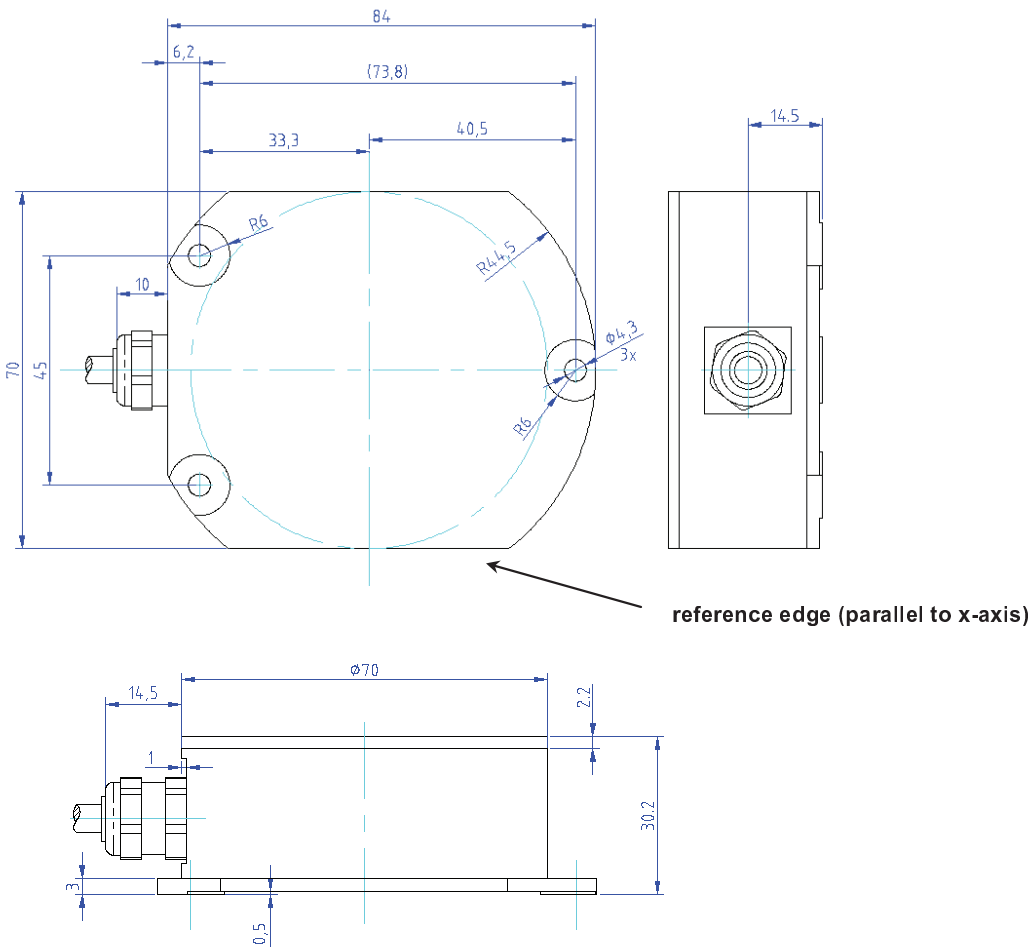

Fig. 4.3 View of the inclinometer housing and metric screwing

7.2 Sensor NS-10/DPG2-RUG, Output RS232, voltage

If not otherwise noted, 25°C ambient temperature, 12V supply voltage were applied.

Parameter	Symbol	Conditions	Min	Typ	Max	Unit
Resolution	Res			0.001		°
Accuracy (digital output) (absolute incl. $\varphi_{off,T}$)	Accd1 Accd2 Accd3	Ta_1 = +25°C Ta_2 = 0°C… +50°C Ta_3 = -40°C… +85°C			0.06 0.09 0.15	° ° °
Initial Offset	$\varphi_{off,I}$			±0.15		°
Temperature drift Offset (3)	$\varphi_{off,T}$	Ta = -25°C … +75°C Ta = -40°C … +85°C			0.05 0.10	° °
Accuracy (analogue voltage output)	Acca1 Acca2 Acca3	Ta_1 = +25°C Ta_2 = 0°C… +50°C Ta_3 = -40°C… +85°C			0.06 0.09 0.15	°
Cross sensitivity	CCAx, CCAy	See (4)			1.4	%
Settling time (5° step)	T_{s90} T_{s99}	with default filter settings: to 90% (=final value ±0,5°) to 99% (=final value ±0,05°)		1.6	1 2	s s
Noise RMS				0.001	0.002	°
Output rate digital		Typ = default settings, other adjustable	0.5	10	25	measure-ments/s
Output analog	V_{xout}, V_{yout}	Nominal -10° to +10°	0.5		4.5	V
Output analog	V_{xout}, V_{yout}	Including overtravel	0.3		4.7	V

(3) Temperature drift offset is defined in general by:
$\varphi_{off,T} = \varphi_{off}(T_a) - \varphi_{off}(25°C)$
Please note: The offset drift given above is not a relative but an absolute number as the drift is not necessarily a linear function of temperature. In other words: The offset drift specified is the maximum to be observed in the given temperature interval.

(4) CrossSens is defined by:
CCAx=Sensx(Inclinationy)/Sensx(Inclinationx)
CCAy=Sensy(Inclinationx)/Sensy(Inclinationy)

Component Placement Top Side CPU2000M

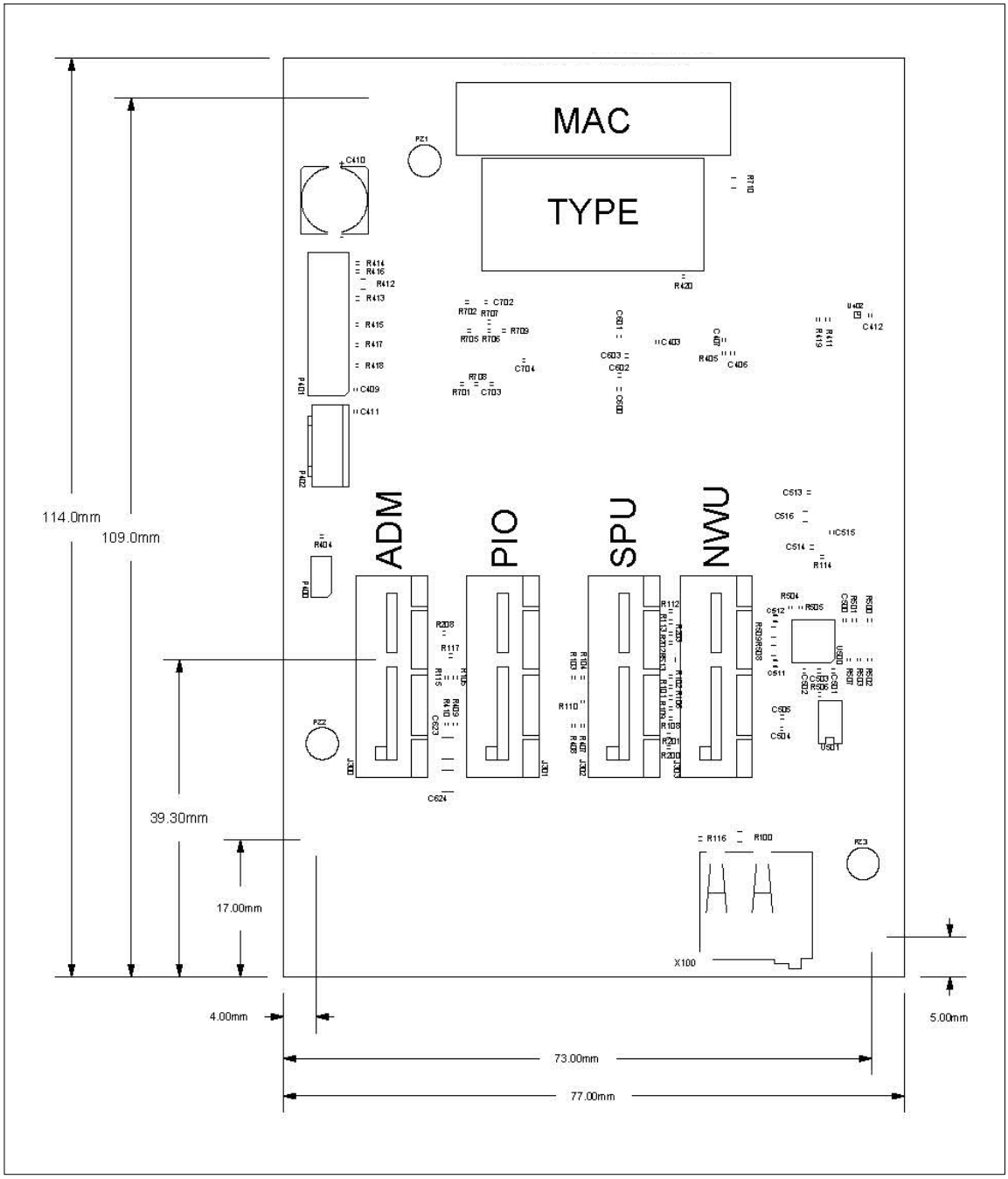

Doc no	10862/0-03
Page	1 of 3

Component Placement Bottom Side CPU2000M

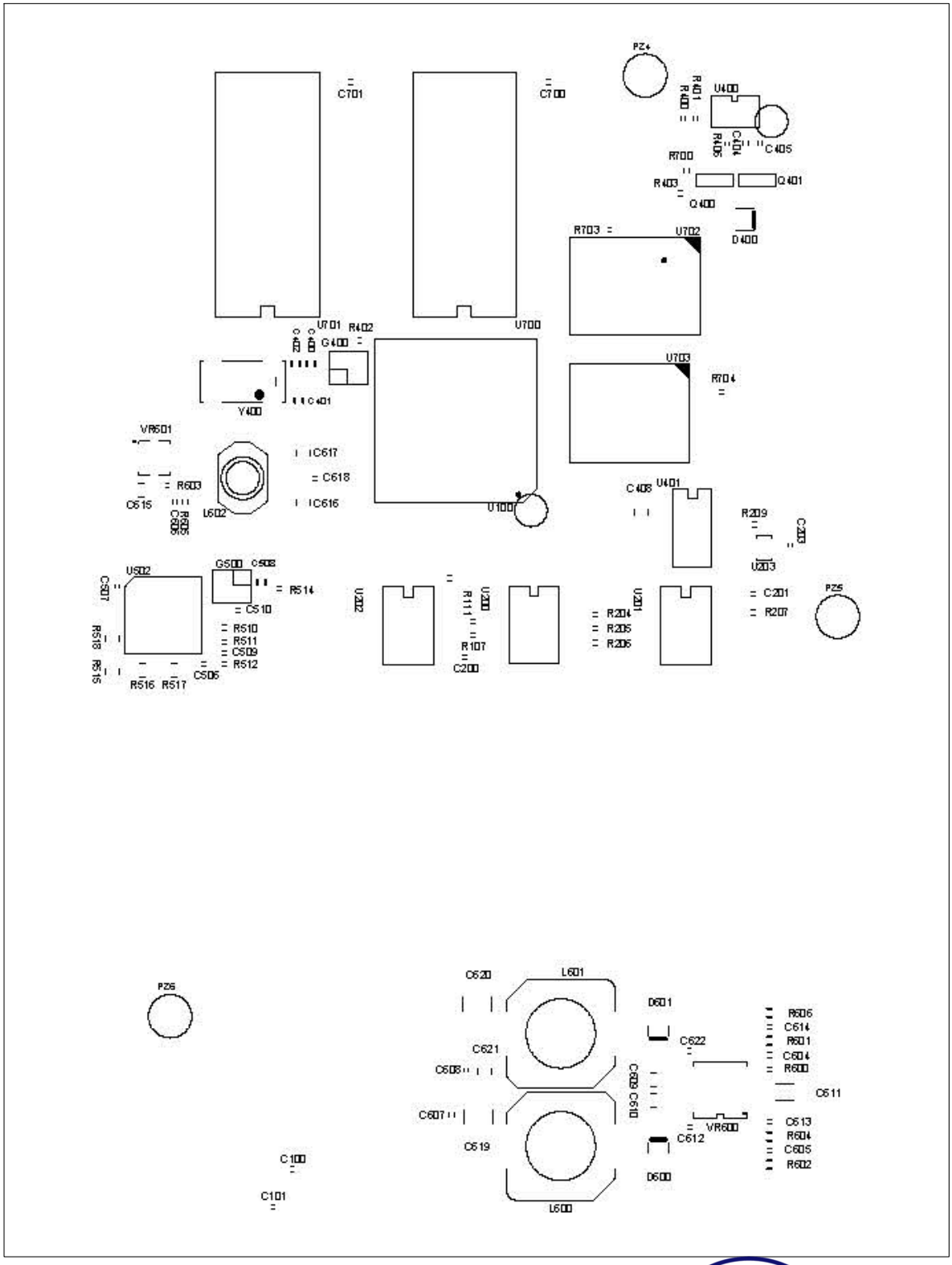

Doc no	10862/0-03
Page	2 of 3

Partlist CPU2000M

Partlist

CPU2000M

Partname ST.2300.0533
Index 005

Revision: U703 war ST.2125.0268 (512MBit)

Pos.	Part Number	Part Description	Qty.	Placement
	ST.2304.0533	PCB for CPU2000M Index 003	1	---
1	ST.2125.0289	DRV 74HCT241 SMD TSSOP-20	1	U201
2	ST.2125.0283	DRV 74HCT244PW SMD TSSOP-20	1	U202
3	ST.2125.0282	DRV 74LCX244 SMD TSSOP-20	1	U200
4	ST.2120.0862	JCK PCI-e x1 36 (18x2) straight THT 2x18	4	J300, J301, J302, J303
5	ST.2125.0307	LOG OR SN74LVC1G32 SMD DCK-5	1	U203
6	ST.2125.0279	MEM IS62WV51216BLL 8MBit 512kx16 Bit SMD BGA-48	1	U702
7	ST.2125.0269	MEM K4S561632J-UI75T 256MBit 4x4Mx16 Bit SMD TSOP	2	U700, U701
8	ST.2125.0331	MEM NAND Flash 1GBit 1024MBit 1kx64x2048 Bytes SMD VFBGA63	1	U703
9	ST.2125.0281	PCR LPC3250 ARM926EJ-S SMD TFBGA296	1	U100
10	ST.2120.0792	PLG 1x2 2 (2x1) straight THT 1x2 RM2,54	1	P400
11	ST.2120.0203	PLG 76384-304 4 (4x1) straight THT 1x4 RM2,54	1	P402
12	ST.2125.0338	REG Step Down FAN2001 SMD MLP-6	1	VR601
13	ST.2125.0339	REG Step Down x2 LM26400Y SMD MLP-16	1	VR600
14	ST.2125.0271	SPC DP83848T SMD LLP-40	1	U502
15	ST.2125.0270	SPC ISP1301BS SMD QFN-24	1	U500
16	ST.2125.0327	SPC LM94023 SMD-BGA-4	1	U402
17	ST.2125.0231	SPC MAX6368 SMD SOT23-8	1	U400
18	ST.2125.0246	SPC RTC-8564 JE SMD VSOJ-20	1	U401
19	ST.2125.0238	SPC TPS2041BD SMD SOIC8	1	U501
20	ST.2104.0003	TRA BC846 NPN 0,1A 300MHz SMD SOT23	2	Q400, Q401

Do not mount the following parts :

C100, C101, P401, R116, R419, R703, R705, R706, R707, R708, R709, X100

Component Placement Top Side ADM200M

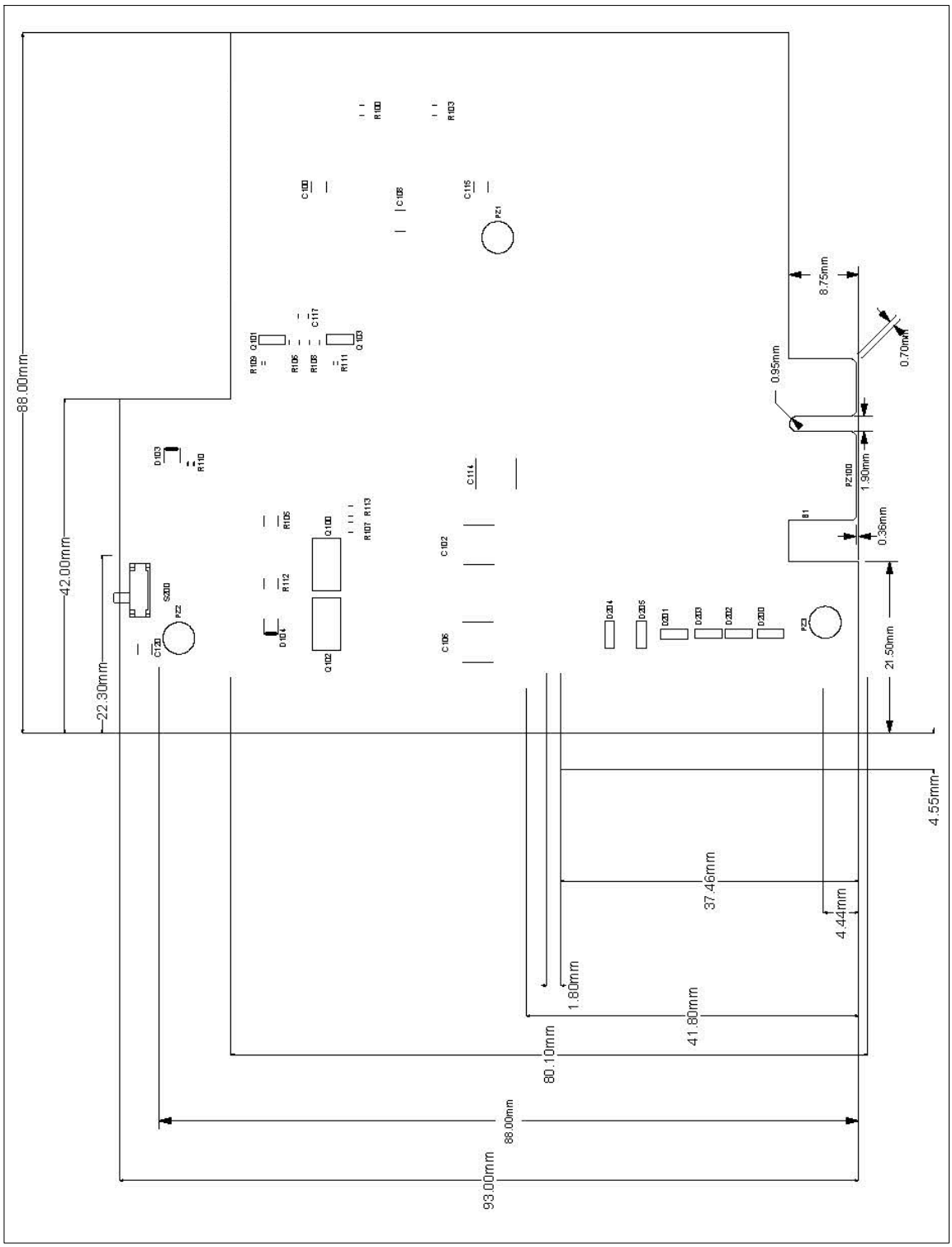

Doc no	10862/0-04
Page	1 of 4

Component Placement Bottom Side ADM200M

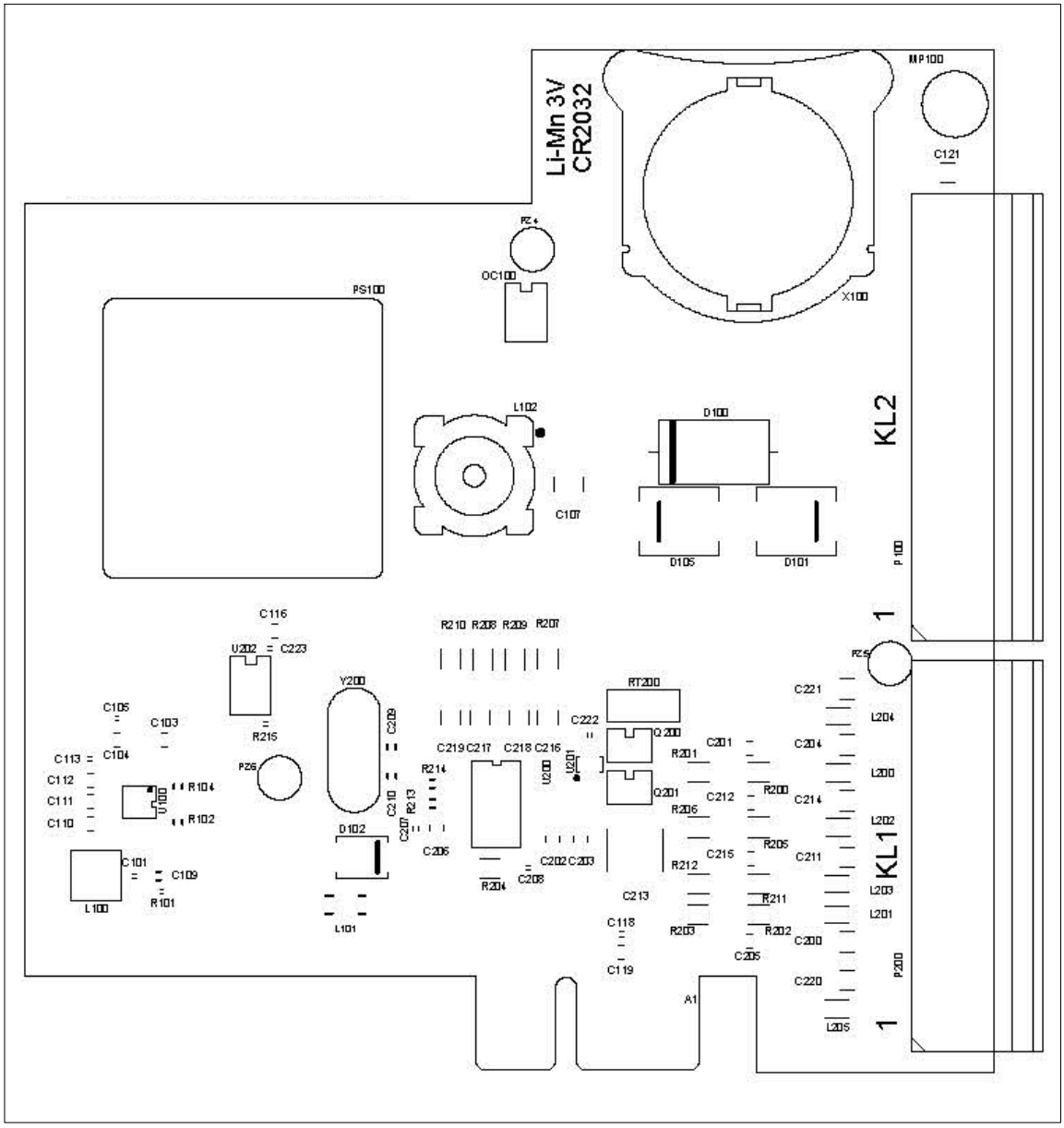

Doc no	10862/0-04
Page	2 of 4

Drill and Layer

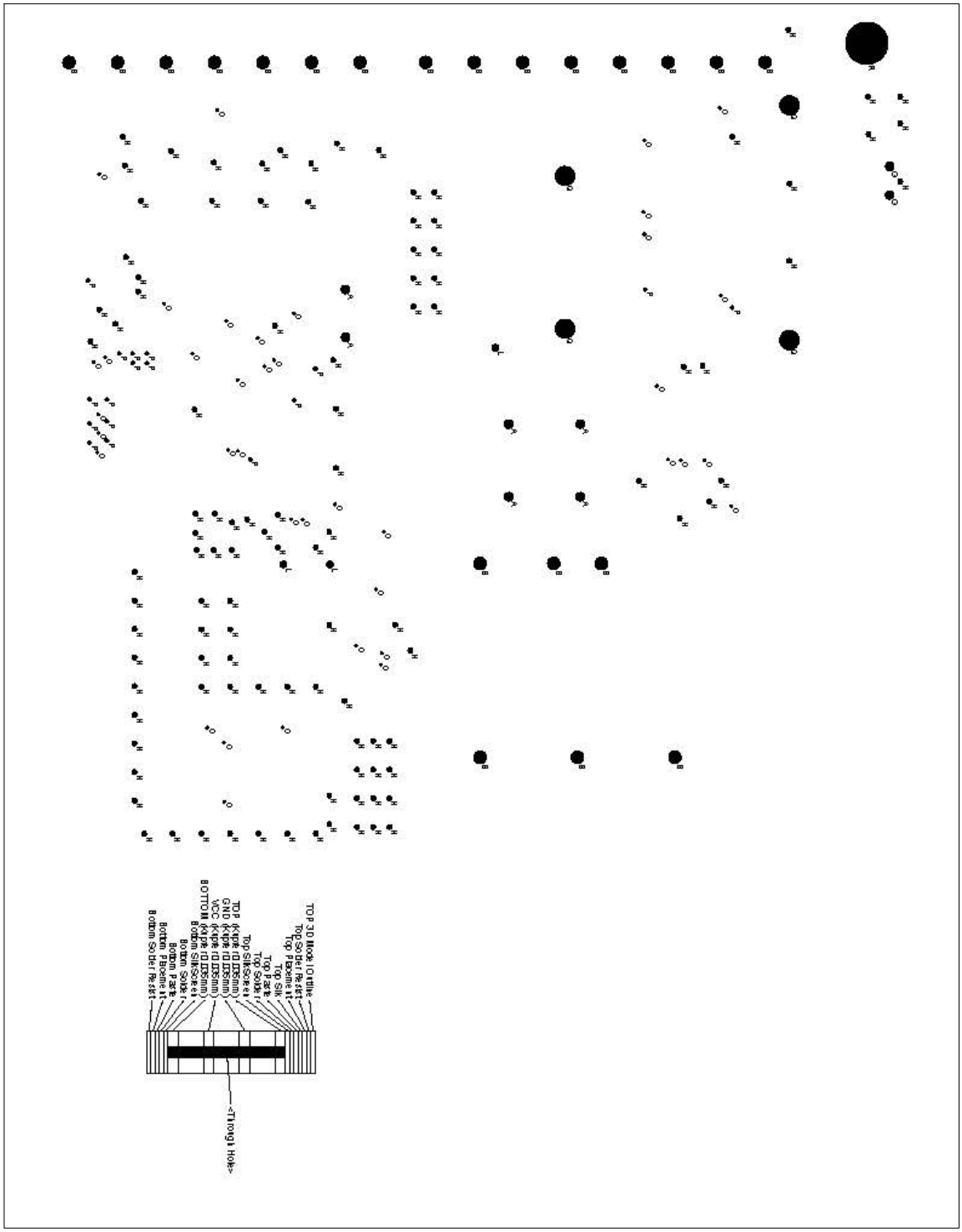

Doc no	10862/0-04
Page	3 of 4

Partlist ADM2000M

Partlist

ADM2000M

Partname ST.2300.0534
Index 005

Revision: C100+C115 in NB, D100 in SB3H90, D101 ersetzt durch 2x STIEC45-30AS

Pos.	Part Number	Part Description	Qty.	Placement
	ST.2304.0534	PCB for ADM2000M Index 004	1	---
1	ST.2107.0011	BAT CR2032 230mAH 3V	1	X100
2	ST.2120.0123	JCK MSTB 2,5/7-ST-5,08 7 (7x1) straight	1	P100
3	ST.2120.0124	JCK MSTB 2,5/8-ST-5,08 8 (8x1) straight	1	P200
4	ST.2129.0068	KNZ ADM2000P KL1	1	P100
5	ST.2129.0069	KNZ ADM2000P KL2	1	P200
6	ST.2125.0180	LOG INV SN74LVC2G04 SMD DCK-6	1	U201
7	ST.2125.0186	MEM M95040 0,004MBit 512x8 SMD SO8 150mil	1	U202
8	ST.2125.0340	PWR THN15-2412WI 15W 12V THT	1	PS100
9	ST.2125.0183	QCO 4,9152MHz 30ppm THT	1	Y200
10	ST.2125.0337	REG Step Down LT3970 SMD MSOP-10	1	U100
11	ST.2125.0178	SPC AD7730BRU SMD TSSOP24	1	U200
12	ST.2125.0051	SPC ILD207T SMD SOIC8	1	OC100
13	ST.2106.0125	SUP SMBJ5.0A Uni 600W 7,82V SMD SMC DO-214AA	1	D102
14	ST.2106.0309	SUP STIEC45-30AS Uni W 36,8V SMD DO-214	2	D101, D105
15	ST.2122.0006	SWI PCM12SMTR SWI SPDT SMD	1	S200
16	ST.2104.0003	TRA BC846 NPN 0,1A 300MHz SMD SOT23	2	Q101, Q103

Do not mount the following parts :

C100, C115, C120, D200, D201, D202, D203, D204, D205, R100, R103

Remarks :

Please consider ST.2120.0874 for PCI Edge card connector
Batterycontact: chemical Gold (min. 3-6µm Ni / min. 0,07-0,10µm)
Please assembly the Battery with a isolated plate
Please marks the Switch (S200) with white color.

Display WTX120

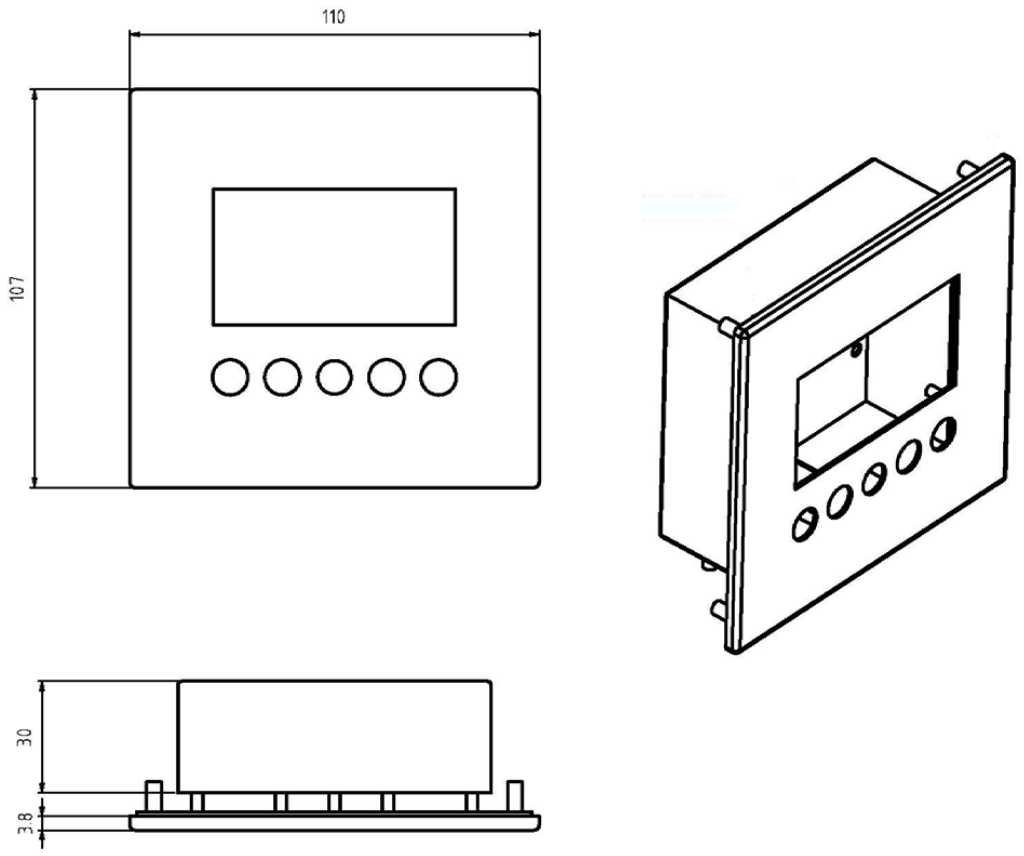

Housing WTX120 without Display

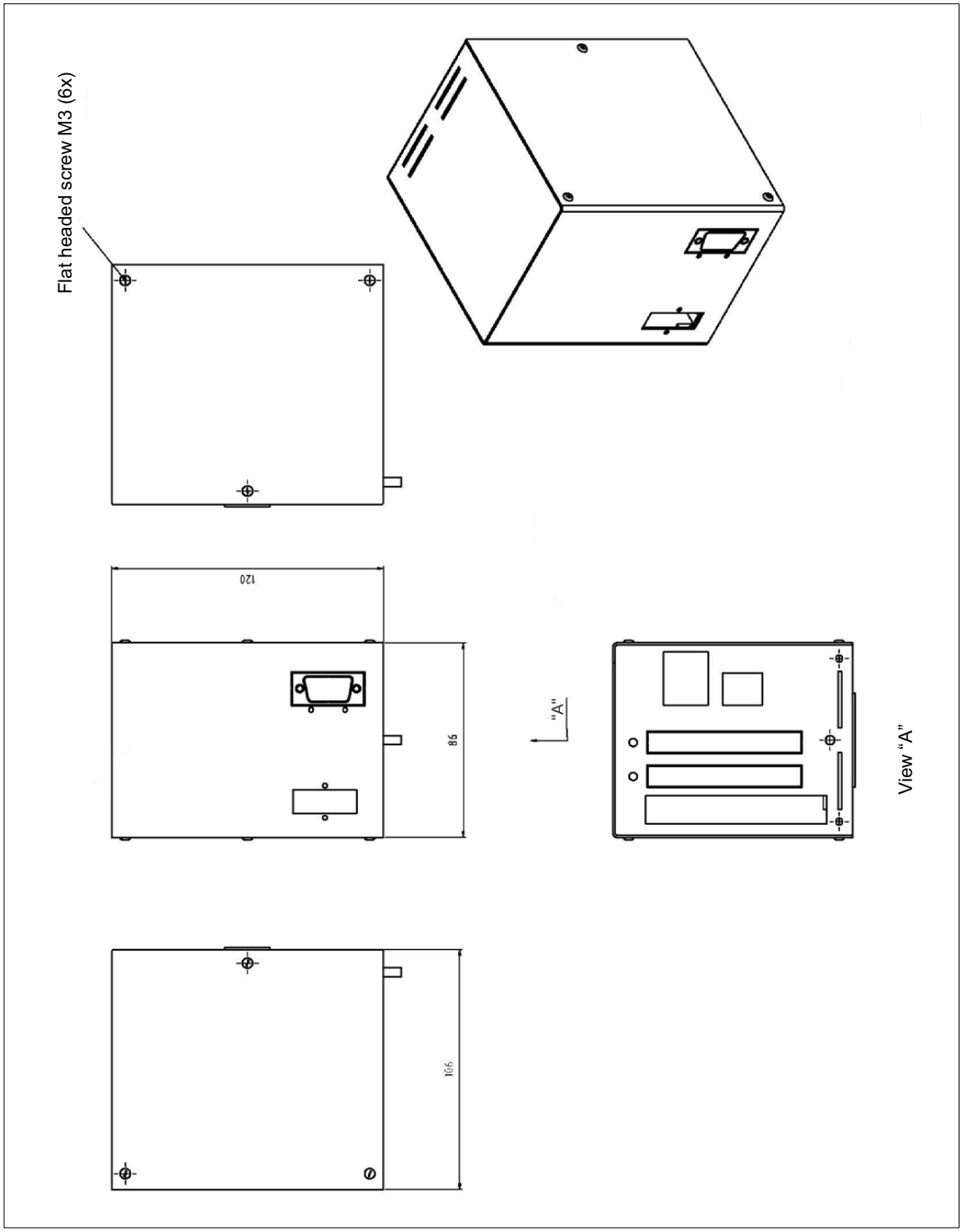

Doc no	10862/0-06
Page	1 of 1

Housing WTX120 with Display

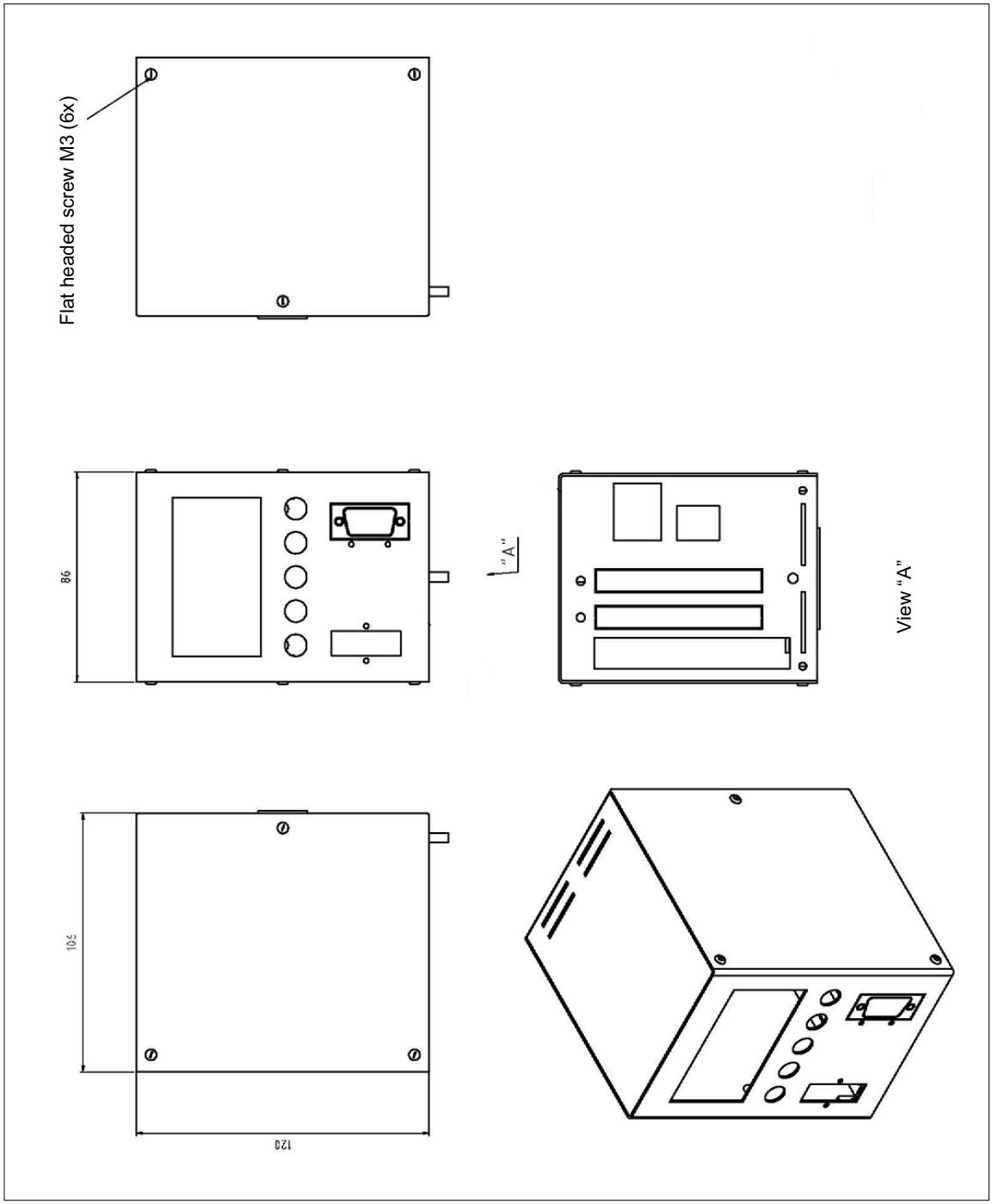

Doc no	10862/0-07
Page	1 of 1

WTX120

Legal-for-trade weighing terminal

Technische Information / *Technical Information*

Versiegelung des WTX120 / *Sealing of the WTX120*

Kalibrierjumper / *Calibration Jumper*

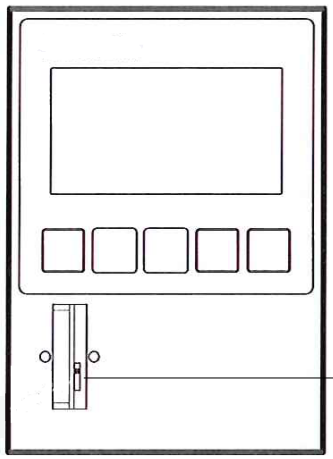

S1	**S1**
Schalter oben:	*Switch up*
Kalibrierdaten gesichert, Änderungen nicht möglich	*Calibration disabled, data secured*
Schalter unten: (Richtung Anschlüsse)	*Switch down: (in the direction of connection)*
Änderungen der Kalibrierdaten möglich	*Calibration enabled*

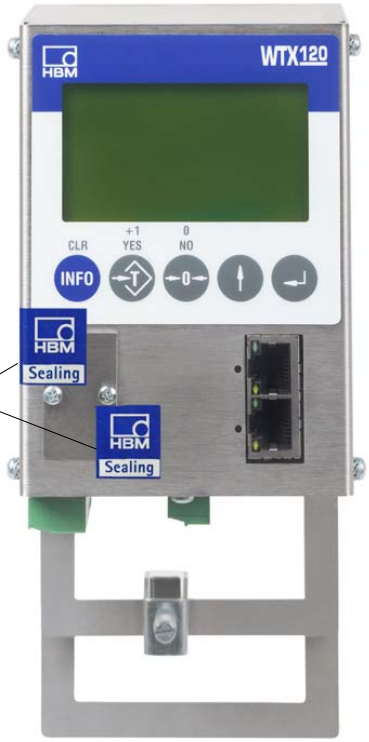

Hier Siegelmarken kleben
Place seal marks here

B4650-1.0 de/en 11.2016 HBM: public

Wägezellenanschluss und Gehäuse / *Load cell connection and housing*

Hier Siegelmarke kleben
Place seal mark here

Nur bei Anschluss eines Neigungssensors
Only if a tilt sensor is connected

Änderungen vorbehalten.
Alle Angaben beschreiben unsere Produkte in allgemeiner Form. Sie stellen keine Beschaffenheits- oder Haltbarkeitsgarantie dar.

Hottinger Baldwin Messtechnik GmbH
Im Tiefen See 45 · 64293 Darmstadt · Germany
Tel. +49 6151 803-0 · Fax +49 6151 803-9100
Email: info@hbm.com · www.hbm.com

B4650-1.0 de/en 11.2016 HBM: public

measure and predict with confidence