Operating Manual

DWS2103

Digital scale display

I2935-2.0 en

Contents

Typographical conventions 7

Important information 8

Safety instructions 9

1 Introduction and appropriate use 10

1.1 DWS2103 functions 11
1.2 Operating digital transducers with the DWS2103 12
1.3 Operating digital transducers with a controller 12

2 Special features 14

3 Mechanical construction and scope of supply 15

3.1 Scope of supply 15
3.2 Accessories, to be ordered separately 16

4 Scale commissioning overview 17

4.1 Initial commissioning 17
4.2 NAWI application 18

5 Electrical connections 19

5.1 Notes 19
5.2 Cable connection 19
5.3 Cable preparation 20
5.3.1. Connecting DWS2103 with RS485, 4-wire bus 21
5.3.2. Connecting DWS2103 with RS485, diagnostic bus, 2-wire 22
5.3.3. Connecting DWS2103 with CANopen bus 23
5.4 Load cell connection 24
5.5 Supply voltage 25
5.6 Voltage outputs 25
5.7 RS485 and CANopen interfaces (terminal block K1) 26
5.8 Terminal block K1 assignments 27
5.9 RS232 interface (COM2) 28
5.10 RS232 interface (COM3) 28
5.11 RS232 interface (COM4) 29
5.12 PS2 keyboard interface 29
5.13 USB printer interface 29
5.14 Mounting the Anybus module (COM5) 29

6 Control and display functions 32
6.1 Device view 32
6.2 Control elements 33
6.3 Display 33

7 Basic scale functions 36
7.1 Switching on and off 36
7.2 Zero setting the scale 37
7.3 Gross/net selection 38
7.4 10-fold resolution 38
7.5 Taring 39
7.6 Zero on start-up 39
7.7 Error displays 40
7.8 Standstill recognition 40

8 Parameter menu 41
8.1 Calling the parameter menu 41
8.2 Disabling / enabling menu functions 41
8.3 The main menu 42
8.4 Navigation in the parameter menu 43
8.4.1 Navigation via device keys 43
8.4.2 Navigation via external keyboard 44
8.5 Full menu structure 45
8.5.1 “DEVICE SELECTION” parameter menu 45
8.5.2 “INFORMATION” parameter menu 46
8.5.3 “PRINT” parameter menu 49
8.5.4 “PRINT – MEASURED VALUE” parameter menu 49
8.5.5 “PRINT – PARAMETERS” parameter menu 50
8.5.6 “DISPLAY” parameter menu 51
8.5.7 “LIMIT VALUE” parameter menu 53
8.5.8 “LIMIT VALUE – LIMIT VALUE 1” parameter menu 53
8.5.9 “LIMIT VALUE – LIMIT VAL. 2(-4)” parameter menu 54
8.5.10 “PEAK VALUE” parameter menu 55
8.5.11 “TRIGGER” parameter menu 56
8.5.12 “BATCHING” parameter menu 58
8.5.13 “COMMUNICATION” parameter menu 80
8.5.14 “PRINT PROTOCOL” parameter menu 83
8.5.15 “CLOCK” parameter menu 84
8.5.16 “FUNCTION KEYS” parameter menu 85
8.5.17 “SCALE CONFIGURATION” parameter menu 86
8.5.18 “FUNCTION TEST” parameter menu 87
8.5.19 “MODE” parameter menu 89
8.5.20 “SCALE ADJUSTMENT” parameter menu 91
8.5.21 “COPY PARAMETERS” parameter menu 96
8.5.22 “FACTORY SETTINGS” parameter menu 97

9 Filter selection 98

10 Scale adjustment 99

10.1 Configuration of the load cells 99
10.2 Prerequisites for scale adjustment 100
10.3 Scale adjustment with maximum capacity (standard method, calibration weight = nominal (rated) value) 101
10.4 Scale adjustment with partial load (calibration weight = 20 (5) to 120 % of nominal (rated) value) 102
10.5 Adjustment without calibration weight (computational adjustment) 103
10.6 Multi-range weighing machine 105
10.7 Taking gravitational acceleration into account 105

11 Linearization 106

12 Legal-for-trade applications 108

13 Print function 111

13.1 Activating the printer interface 111
13.2 DWS2103 – printer connection 111
13.3 Print protocol selection 112
13.4 Starting printing 112
13.5 Different print protocols 112

14 Interface for a second display 116

14.1 Activating COM4 for a second display 116

15 Limit values 119

16 Alibi and calibration memory 120

16.1 Reading the stored files 120
16.2 SD memory card 121

17 Parameter factory settings 123

18 Monitoring functions and error messages 124

18.1 Monitoring functions 124
18.2 Error messages 125

19 Dimensions 129

19.1 DWS2103 and panel frame cutout dimensions 129
19.2 Desktop housing, also for wall-mounting (1-TG2116) 130

Typographical conventions

For clear identification and improved legibility, the following conventions have been used in this documentation:

NOTE

Important paragraphs are marked with the Note symbol to draw attention to them.

Italics	Indicates external documents and files
”MODE”	All menus and menu commands appear in quotes, here the main menu ”MODE”.
”ENTER”	Quotes and italics are used for keys, input fields and user input.
TAR	Bold is used for communication commands.
Er1250	Underlined normal print is used for error messages.

FIT..., PW..., AED... Components of HBM’s digital scale system.

The products are identified by this character

Important information

NOTE

Neither the design of the device nor any technical safety aspects may be modified without the express permission of Hottinger Baldwin Messtechnik GmbH. Any modification excludes Hottinger Baldwin Messtechnik GmbH from any and all liability for any damage resulting therefrom.

When replacing the battery for the real-time clock, the device must be disconnected from the power supply (battery life ≧ 5 years).

It is strictly forbidden to carry out any repairs and soldering work on the motherboards or to replace any components. Repairs may only be carried out by persons authorized by Hottinger Baldwin Messtechnik GmbH.

The production number set at the factory cannot be changed.

When connecting the cables, the device must be disconnected from the voltage supply.

Safety instructions

- There are no hazards associated with this product, provided the notes and instructions for project planning, assembly, appropriate operation and maintenance are observed.
- Each time, before starting up the equipment, you must first run a risk analysis that takes into account all the safety aspects of automation technology. This particularly concerns personal and machine protection.
- It is essential to comply with the safety and accident prevention regulations specific to the particular application.
- Installation and start-up must only be carried out by suitably qualified personnel.
- Do not allow damp and dirt to get inside the device when connecting the cables.
- When connecting the cables, take action to prevent electrostatic discharge as this may damage the electronics. This also applies to the connection of additional devices.
- The required power supply for the device is an extra-low voltage (10 to 30 V) with safe disconnection from the mains.
- Shielded cables must be used for all connections apart from the supply voltage (see note below). The shield must be connected to the provided terminals (Chapter 5.3, Page 20).
- The use of unshielded cables for the voltage supply is only permissible for cables with a maximum length of 30 m, laid inside buildings. If cables are longer or are installed outside buildings, shielded cables must be used as per EN 61326–1.
- The ground connections of the supply voltage, the interfaces and the load cell cable shield are interconnected in the device. If the potentials of the devices to be connected are different, suitable steps must be taken to isolate the signals, e.g. by using an opto-coupler.
- To compensate for potential differences, the metal housing of the DWS2103 must be connected to the scale structures as well as to the ground potential of the connected devices by a low-ohm equalizing conductor. This is unnecessary if the potential difference does not exceed 35 V.
- In the device, the reference ground (GND) of all the signals and the supply voltage is connected directly to the cable shield connection but not to the housing.
- Connection to a wide-ranging supply network is not permitted as this often causes interfering voltage peaks to be coupled into the electronics. Instead, a local supply must be provided for the DWS2103 (even when grouped).
- The front foil is made from high-quality materials, providing a service life appropriate to the external conditions. The keys must only be operated by hand; under no circumstances must pointed objects be used to press them.

1 Introduction and appropriate use

This Operating Manual describes the operation and the setting options of the DWS2103 scale electronic.

The DWS2103 is used to connect HBM digital transducers. HBM digital transducers are:

- The FIT model series digital load cells
- The PWxxi digital load cells (e.g. PW15AHi, PW20i)
- Digital measurement chains (analog load cells and AD104C/AD105C transducer electronics)
- Digital measurement chains with AED family scale electronics (analog load cells and AED9101, AED9201, AED9301, AED9401 or AED9501)
- Digital measurement chains (analog load cells and VKIA 405 transducer electronics)

Signal conditioning and process control are implemented in the respective digital transducers.

The DWS2103 is designed for use in various industrial applications:

- As a legal-for-trade main display for HBM digital transducers
  - Up to 90 transducers when connecting via the RS-485 interface
  - Up to 128 transducers when connecting via the CAN interface
- As the component(s) of a non-automatic scale (NAWI) [1)]
- In automatic weighing instruments (check weigher) for production monitoring
- In automatic weight grading machines
- In filling and batching controls

Use for any purpose other than the above is deemed to be non-designated use.

In the case of legal-for-trade use, national legal and safety regulations must be complied with.

1) NAWI (non automatic weighing instrument)

1.1 DWS2103 functions

You can operate all digital HBM transducers with a PC-independent, legal-for-trade display using the DWS2103. The DWS2103 provides all functions necessary for setting the digital transducer. In addition, it shows all measured values and results (trigger, batching, etc.) on the display. The DWS2103 is particularly suitable for legal-for-trade applications due to the encrypted transmission of measured values.

The DWS2103 has the following basic functions:

- Display of current measured value and measured value status of a selected channel
- Parameterization of all connected digital transducers
- Display and printout of weighing results
- Storage of weighing results
- Communication with a higher-level system (PC, PLC)

The DWS2103 does not have any inputs/outputs available, use the inputs/outputs of the connected digital transducer.

The DWS2103 can be operated either via the communication bus (main channel) or the diagnostic bus (diagnostic channel) of the digital transducer. The interfaces available for the load cells are the RS-485 interface and the CAN-Bus interface with the CANopen protocol. Connection must however be implemented via one of the two interfaces for all transducers, mixed operation is not permissible.

The diagnostic channel always uses 38400 baud and operates with half duplex mode (2-wire).

1.2 Operating digital transducers with the DWS2103

You can connect the digital transducer to the DWS2103 either via the diagnostic channel or the main channel (Fig. 1.1).

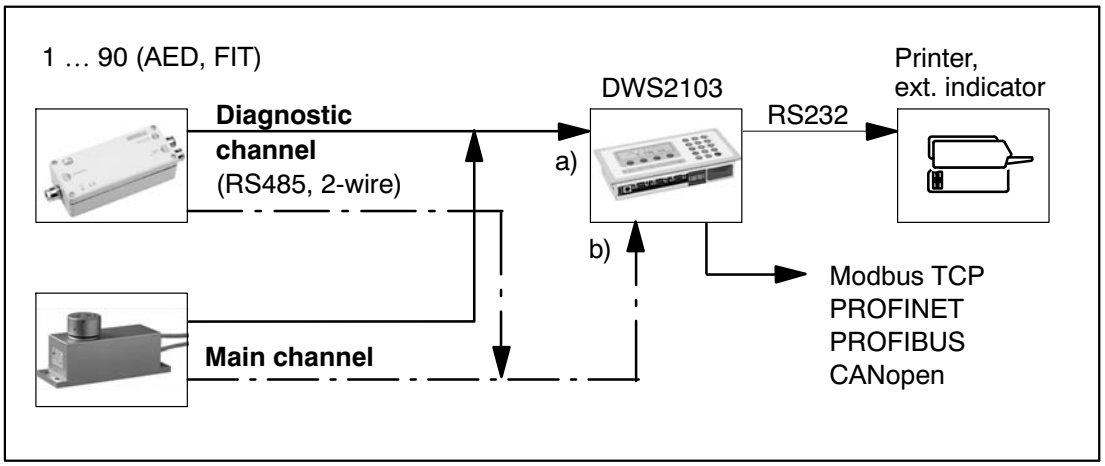

Fig. 1.1: Communication structure, connection to DWS2103 via a) or b)

1.3 Operating digital transducers with a controller

The DWS2103 is used as a (verified) main display in this operating mode. The advantage of this configuration is that the external controller (PC/PLC) can work via a non-verified connection, but the DWS2103 can still be used via the diagnostic channel as a verified main display.

The main channels are interconnected together to form a bus and connected with the external controller for the digital transducer. The diagnostic channels are also interconnected to form a bus and connected to the DWS2103.

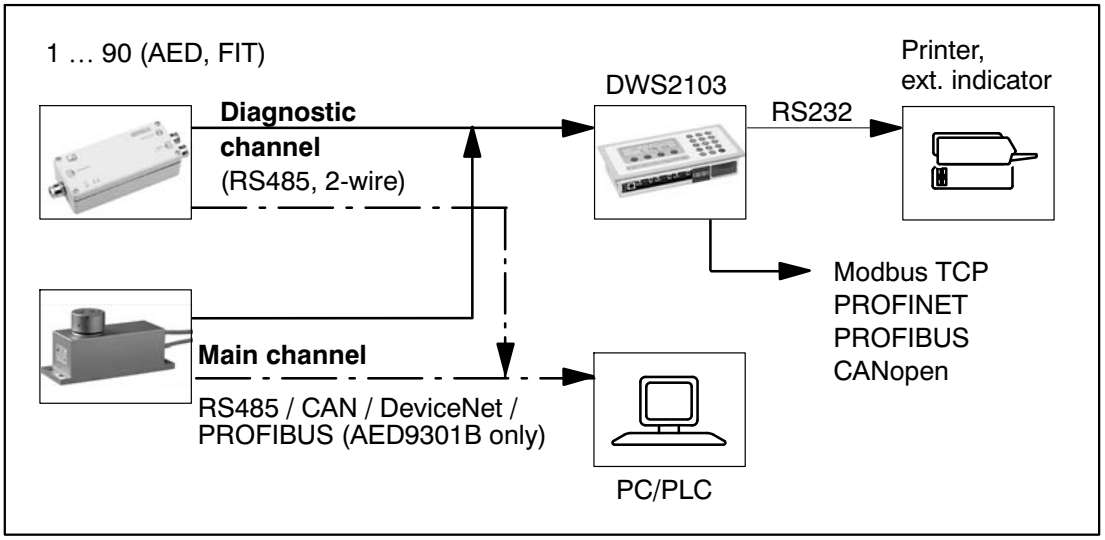

Fig. 1.2: Communication structure with external controller

2 Special features

The DWS2103 is a digital display unit for connecting digital load cells or transducer electronics from the AED system

The DWS2103 has:

- RS485 4-wire connection for up to 90 digital load cells or transducer electronics
- CAN interface for up to 128 digital load cells or transducer electronics
- RS485 2-wire connection for the diagnostic bus of the FIT digital load cells and AED transducer electronics
- Encrypted transmission of measured values between DWS2103 and connected products in legal-for-trade mode
- COM port for serial communication with a PC / PLC (RS232)
- COM port for a printer (RS232 or USB)
- COM port for an external large-scale display (RS232)
- COM port for connection to fieldbuses
- PS2 connection for an external keyboard
- Internal SD card as alibi memory for print data and settings
- Real-time clock with battery buffering
- Supply voltage range 10 to 30 V_{DC}
- Voltage output to power supply of digital load cells

The electronics are set and parameterized via keyboard or interface.

Further features:

- Use as one or two-range scale display
- Menu functions can be disabled / enabled
- Filter selection
- Max. capacity adjustment, partial load adjustment
- Zero on start-up
- Automatic zero tracking
- Weighing range linearization
- Various print functions
- Numerous monitoring and error detection functions

3 Mechanical construction and scope of supply

3.1 Scope of supply

Fig. 3.3: View of DWS2103

- DWS2103 scale electronics in **aluminum housing** for panel mounting
- Adhesive label for closing the opening for the calibration pushbutton and labeling strips
- Eight labeling strips for creating the scale type plate
- Two 8 pin mating connectors (Phoenix Mini-Combicon mating connector 8 pin Type: MC1.5/8-ST-3.81)
- Two connector housings with strain relief (Phoenix Mini-Combicon connector housing 8 pin Type: KGG-MC 1.5/9)
- Four mounting elements for panel mounting

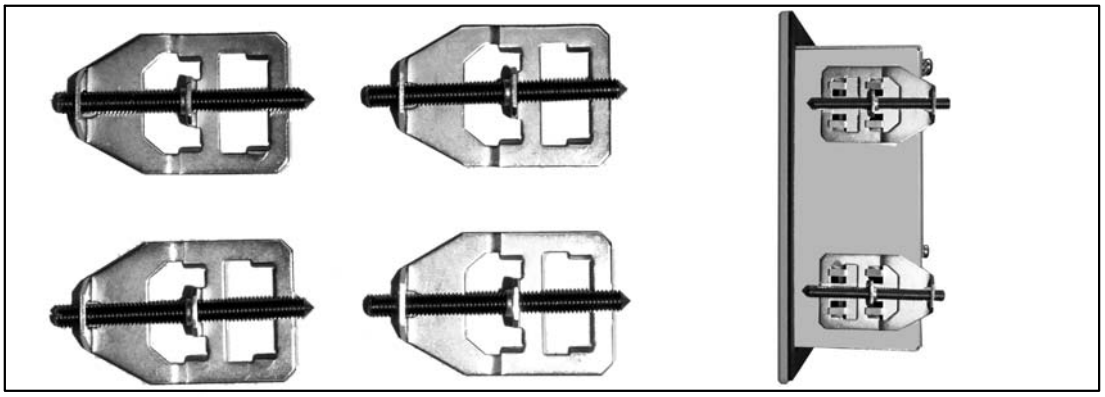

For panel-mounting the DWS2103, the cut-out tabs are bent outward slightly to engage the mounting elements. The threaded pins are then used to clamp the housing to the panel.

- SD card (1 Gbyte) installed in DWS2103
- Quick Start Guide
- System CD, 1-DWS2103-DOC

3.2 Accessories, to be ordered separately

- Power supply, 15 V / 530 mA AC/DC (for max. 8 load cells)
- Desktop housing, also for wall-mounting, 1-TG2116 (Dimensions, Chap. 19.2, Page 130)
- VKD2R-8 junction boxes
- Cables (connection cables for FIT..., PWxi, AED...)

4 Scale commissioning overview

The permissible supply voltage for the DWS2103 is in the range +10 to 30 V_{DC} and must be adequately smoothed (rms value less residual ripple >10 V).

NOTE

When the C16i digital load cell, digital measurement chain or AD104C/Ad105C transducer electronics are supplied via the DWS2103, the max. permissible supply voltage is 17 V_{DC}.

Type FIT, PW...i and AED... digital load cells can be operated with +10 to 30 V_{DC}.

A 100 to 240 V power supply unit (15 V / 530 mA AC/DC, for max. 8 load cells) is available as an accessory. This power supply is suitable for all digital HBM load cells.

When properly connected with shielded cables, the DWS2103 complies with the relevant European standards and carries the CE mark.

A formatted SD card with the factory setting parameters is inserted into the device.

Mechanical dimensions are described in Chapter 19, Page 129 and installation instructions in Chapter 3, Page 15.

Subsequent sub-chapters provide an overview of the sequence of steps that needs to be taken to commission the scale, depending on the application:

- Initial commissioning
- Commissioning as a component of a non-automatic scale (NAWI[1])

This overview includes cross-references to the respective chapters in this Operating Manual.

4.1 Initial commissioning

- Mounting the device, Chapter 3 (Page 15)
- Connecting the load cell(s), Chapter 5 (Page 19) and 5.4 (Page 24)
- Connecting the supply voltage, Chapter 5 (Page 19) and 5.5 (Page 25)
- Connecting the serial interfaces, Chapter 5 (Page 19) to 5.14 (Page 29)
- Switching on the device, Chapter 7.2 (Page 37)
- Configuring the load cell(s), Chapter 10.1 (Page 99)

1) NAWI – non automatic weighing instrument

4.2 NAWI application

- Mounting the device, Chapter 3 (Page 15)
- Connecting the load cell(s), Chapter 5 (Page 19) and 5.4 (Page 24)
- Connecting the supply voltage, Chapter 5 (Page 19) and 5.4 (Page 24)
- Connecting the serial connections, Chapter 5 (Page 19) to 5.14 (Page 29)
- Switching on the device, Chapter 7.2 (Page 37)
- Calling the parameter menu via the hidden keys, Chapter 8 (Page 41)
- Enabling all menu functions, Chapter 8.2 (Page 41)
- Configuring the load cells, Chapter 10.1 (Page 99)
- Setting the weighing range, Chapter 8.5.20 (Page 91)
- Setting the correct filters, Chapter 9 (Page 98)
- Adjusting the weighing range, Chapter 10 (Page 99)
- Linearization (only when required), Chapter 11 (Page 106)
- Settings for legal-for-trade applications, Chapter 12 (Page 108)
- Setting the parameters for the serial interfaces, Chapter 5 (Page 19) to 5.14 (Page 29)
- Setting the date and time, Chapter 8.5.15 (Page 84)
- Disabling menu functions (as required), Chapter 8.5.16 (Page 85)
- Filling out the labeling strip, securing the labeling strip, Chapter 12 (Page 108)
- Checking settings and functions, Chapter 8.5.13 (Page 80)

5 Electrical connections

5.1 Notes

Please comply with the safety instructions at the start of this description.

Load cells and power lines are connected by means of screw terminals on the back of the device. The terminals are fitted with wire protection and the use of wire end ferrules is recommended, particularly for the load cell cables. The assignment of the connection terminals is displayed on the back of the device.

NOTE

All the ground connections are interconnected on the motherboard!

5.2 Cable connection

All connections are accessible from the outside, the housing does not need to be opened. Strain relief for the connection cable can be provided via the supplied terminal housing. Round cables, between 5 and 7 mm in diameter, can therefore be used.

To minimize EMC problems, the individual wires should be as short as possible from the end of the shield to the terminal.

The cable shields must be twisted together and connected to one of terminals 1.1, 1.8, 2.1 or 2.8.

5.3 Cable preparation

Remove the outer sheath to about 20 mm.

Twist the braided screen.

If necessary, remove the inner sheath.

Strip the wire ends to about 5 mm.

Connect the wires to the terminals.

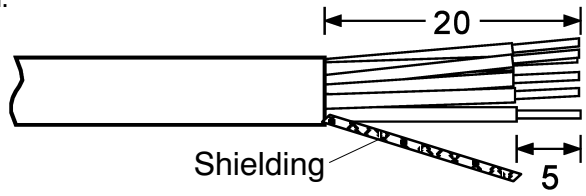

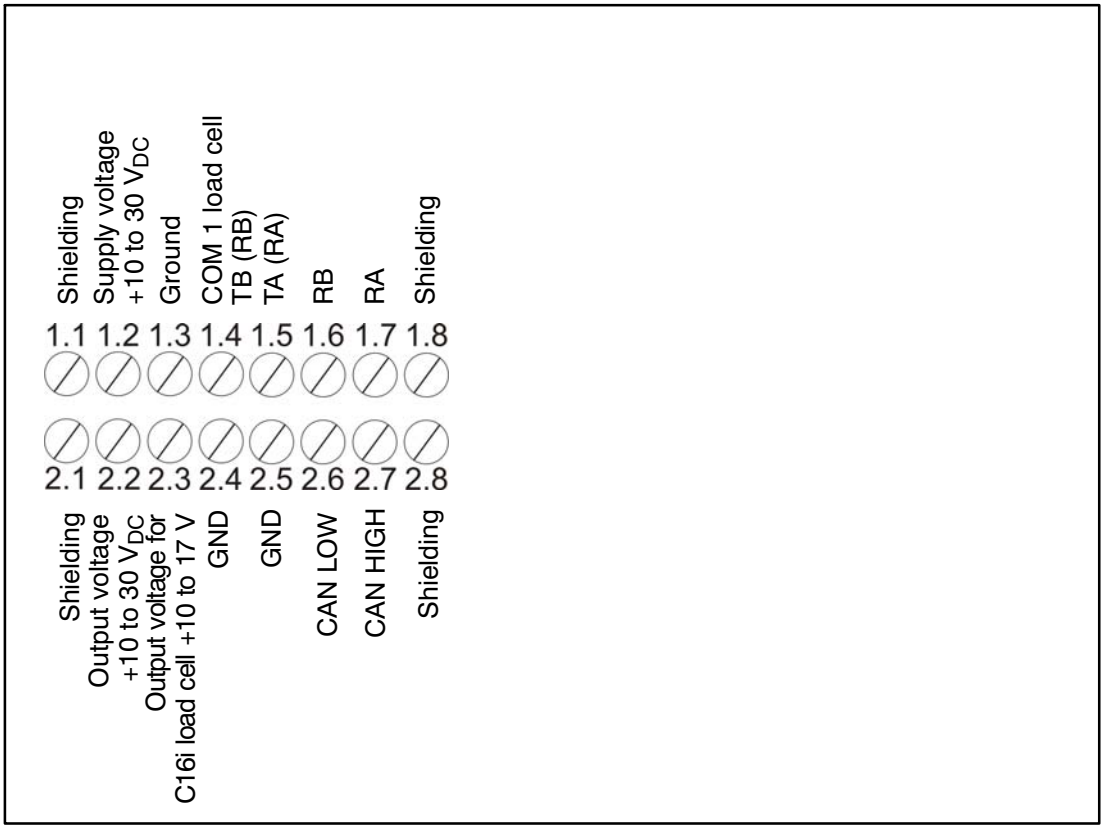

Fig. 5.1: Position of connections on terminal block K1

5.3.1. Connecting DWS2103 with RS485, 4-wire bus

For bus termination, comply with documentation provided for the connected devices.

4-wire RS485	**DWS2103** **Terminal K1**
Shielding connection	1.1
RS485, transmission line A (=T–)	1.7 RA (RX–)
RS485, transmission line B (=T+)	1.6 RB (RX+)
RS485, reception line A (=R–)	1.5 TA (TX–)
RS485, reception line B (=R+)	1.4 TB (TX+)
Voltage supply +, max. 30 V_{DC}	2.2 UB
Voltage supply ground	2.4 GND

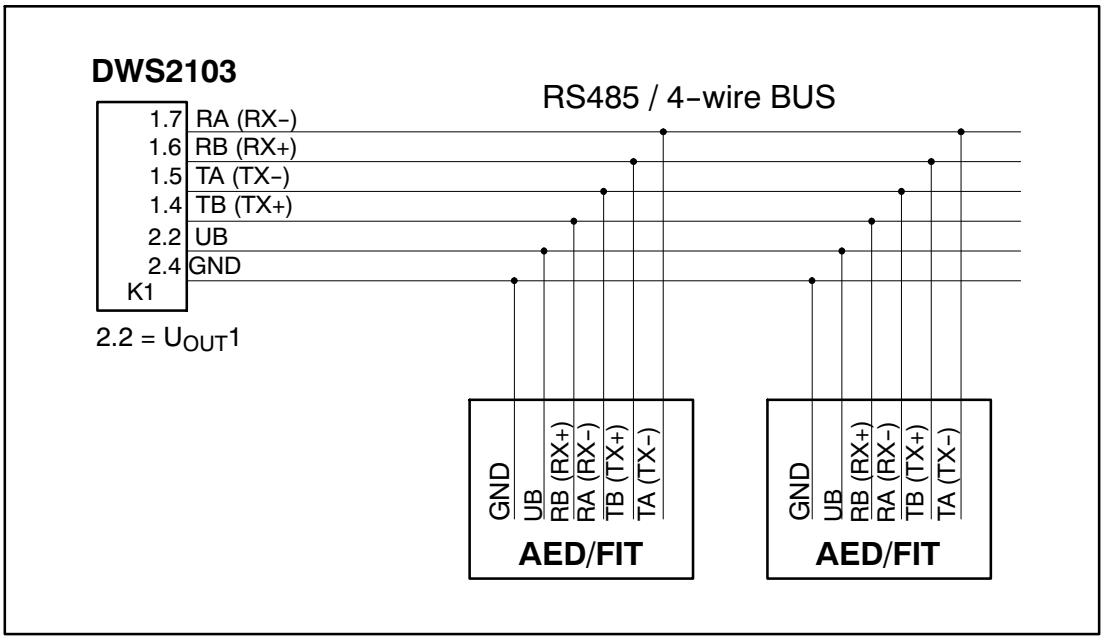

Fig. 5.2: Cable assignment

5.3.2. Connecting DWS2103 with RS485, diagnostic bus, 2-wire

For bus termination, comply with documentation provided for the connected devices.

2-wire RS485 (diagnosis)	**DWS2103** **Terminal K1**
Shielding connection	1.1
RS485, (transmission/reception line A (=R–/T–)	1.5 TA (TX–) / RA (RX–)
RS485, (transmission/reception line B (=R+/T+)	1.4 TB (TX+) / RB (RX+)
Voltage supply +, max. 30 V_{DC}	2.2 UB
Voltage supply ground	2.4 GND

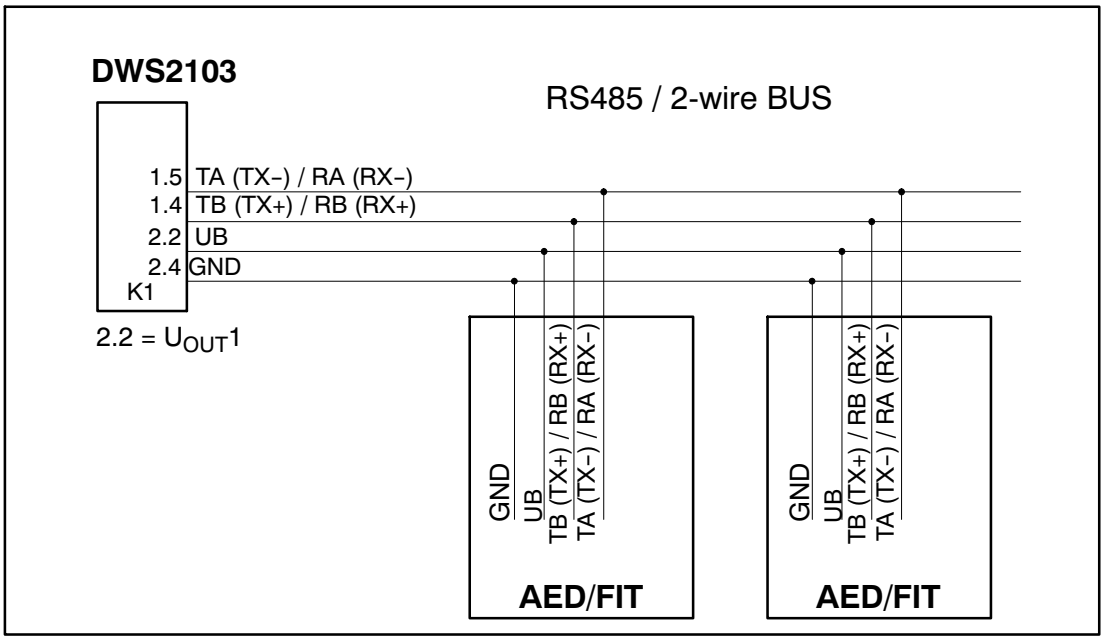

Fig. 5.3: Cable assignment

5.3.3. Connecting DWS2103 with CANopen bus

For bus termination, comply with documentation provided for the connected devices.

CANopen bus	**DWS2103** **Terminal K1**
Shielding connection	1.1
CAN HIGH	2.7 CAN HIGH
CAN LOW	2.6 CAN LOW
Voltage supply +, max. 30 V_{DC}	2.2 UB
Voltage supply ground	2.4 GND

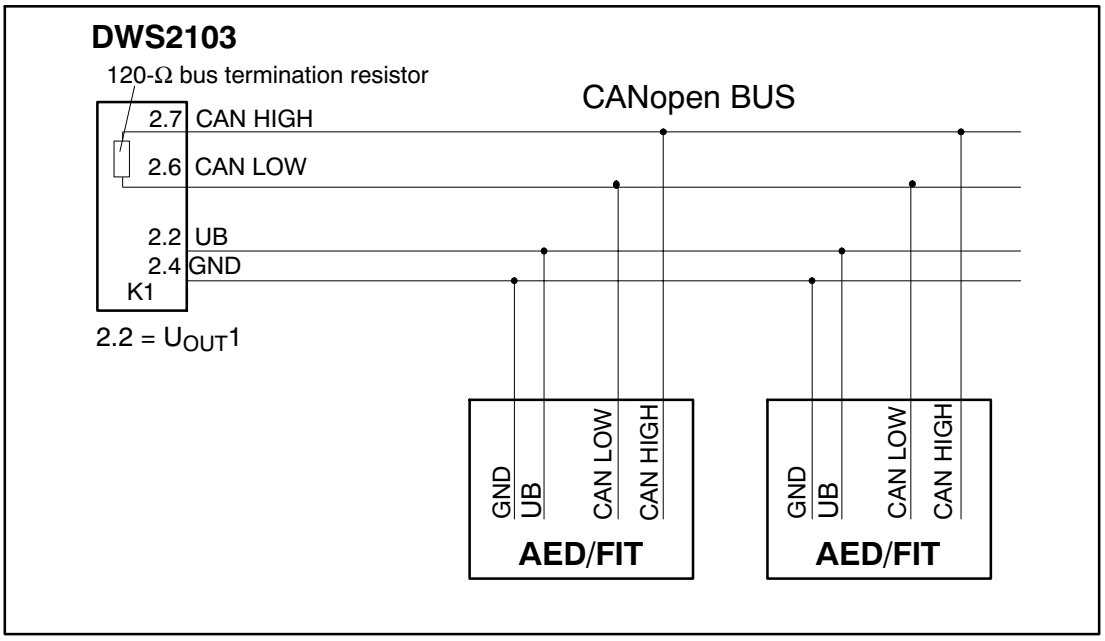

Fig. 5.4: Cable assignment

5.4 Load cell connection

Only HBM digital transducers can be connected to the DWS2103. An RS485 interface and a CAN interface are available on DWS2103 for this purpose.

The DWS2103 can be connected either via the communication bus (main channel) or the diagnostic bus (diagnostic channel) to the digital transducers. Connection must however be implemented via one of the two interfaces for all transducers, mixed operation is not permissible.

There is a choice of interface to use with the digital transducers:

Main channel:	RS485 4-wire (full duplex), RS485 2-wire (half duplex) or CAN
Diagnostic channel:	RS485 2-wire (half duplex, baud rate 38400 Bd, even parity)

Mixed operation of the main and diagnostic channels is not permissible, nor is using different interfaces (RS485, CAN).

Factory settings for all digital transducers (such as FIT, AED, etc.), are address 31 for RS485 and address 63 for CAN.

If several load cells with factory settings are connected to a scale, the load cell addresses must first be changed. To do this, use the parameter menu “BUS SCAN”.

NOTE

Call the “BUS SCAN” parameter menu after connecting the load cells.

5.5 Supply voltage

Terminal	Function	Comments
1.2	Supply voltage	+10 to 30 V_{DC} [1)]
1.3	Ground	

[1)] The supply voltage must be sufficiently filtered (rms value minus residual ripple > 10 V).

5.6 Voltage outputs

Terminal	Function	Comments
2.2	Output voltage 10 to 30 V	The 10 to 30 V input voltage is made available directly at the output to supply digital load cells
2.4	GND	Ground
2.3	Output voltage 10 to 17 V	**NOTE** **This output is only used to supply digital measurement chains with AD104C, AD105C and C16i load cells with a maximum supply voltage of 17 V.** The input voltage is made available at the output up to a value of 17 V. The output is switched off at higher input voltages.
2.5	GND	Ground
1.1, 1.8, 2.1, 2.8	Shielding	

5.7 RS485 and CANopen interfaces (terminal block K1)

The DWS2103 is the master for connection with the attached digital measuring chain elements.

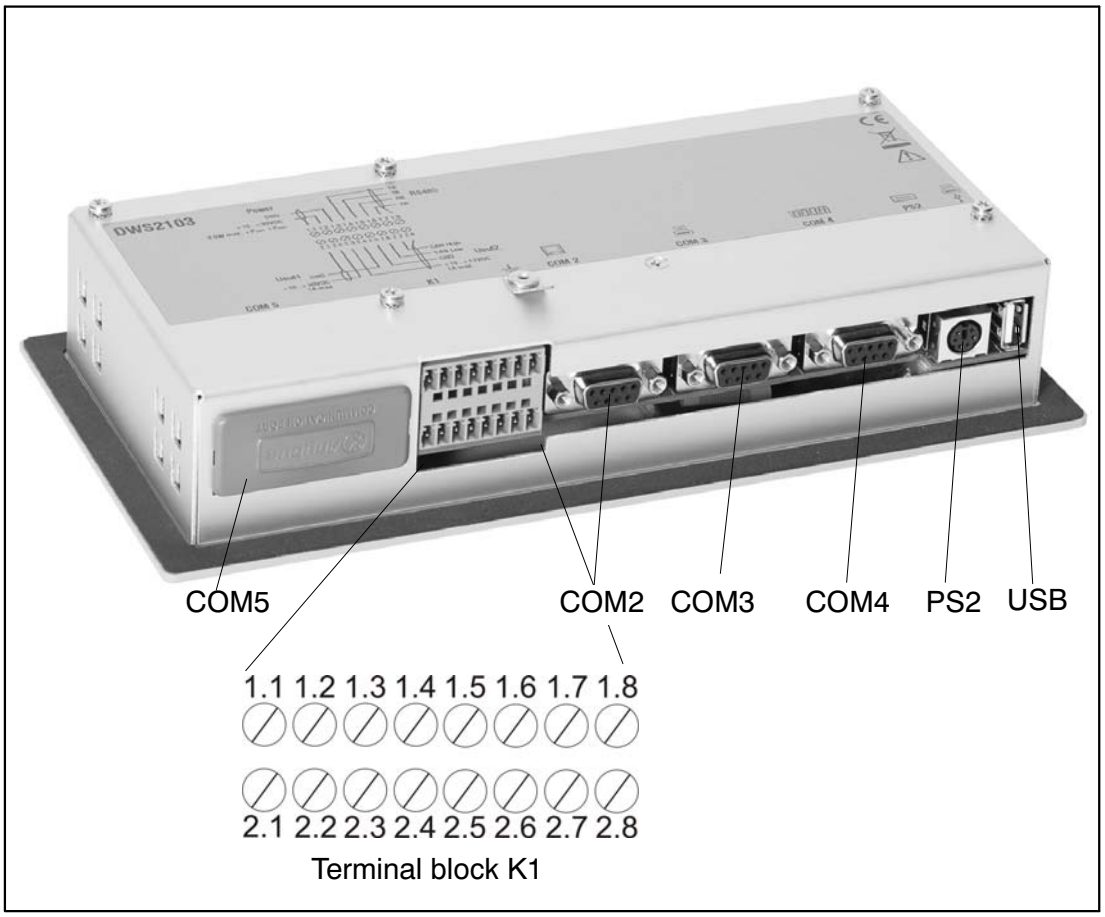

Fig. 5.5: Connection positions (back of device); for assignment, see Page 27

5.8 Terminal block K1 assignments

Terminal block K1 has the following signals:

Supply voltage input

Load cell output supply voltage

RS485 4-wire load cell interface

RS485 2-wire diagnostic interface

CAN load cell interface (depending on load cell)

Terminal	Signal			Comments
1.1,1.8 2.1, 2.8	Shielding			
1.2	Supply voltage	10 to 30 V		
1.3	Supply voltage	GND		
1.4	COM1 load cell (diagnosis)		TB (RB)	Serial interface RS485 Use only terminals 1.4 and 1.5 for RS485 2-wire
1.5	COM1 load cell (diagnosis)		TA (RA)	
1.6	COM1 load cell		RB	
1.7	COM1 load cell		RA	
2.2	Voltage output	10 to 30 V		Output voltage = input voltage
2.3	**NOTE** Voltage output supply measurement chains with AD104C, AD105C and C16i	10 to 17 V		With input voltage > 17 V this output does not supply voltage
2.4, 2.5	Voltage output	GND		
2.6	COM1 load cell		CAN_low	CAN interface
2.7	COM1 load cell		CAN_high	

5.9 RS232 interface (COM2)

COM2 (9-pin SUB-D socket), computer interface for connecting to a PC.

The SUB-D socket is assigned so that a standard RS232 cable can be used.

1
2 RS232-TX
3 RS232-RX
4
5 0 V
6
7
8
9

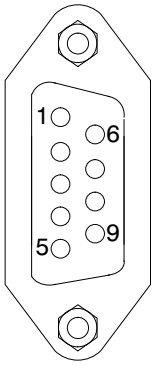

5.10 RS232 interface (COM3)

COM3 (9-pin SUB-D socket), printer interface for connecting a serial printer. The SUB-D socket is assigned so that a standard printer cable can be used.

1 ---
2 RS232-TX
3 RS232-RX
4 DSR (DTR from printer)
5 0 V
6
7
8
9

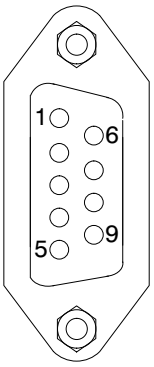

5.11 RS232 interface (COM4)

COM4, interface for connecting a second display via a 9-pin SUB-D socket. The SUB-D socket has the standard PC assignment.

1 ---
2 RS232-TX
3 RS232-RX
4 DSR (DTR from second display)
5 0 V
6
7
8
9

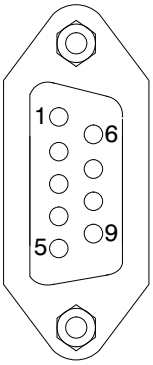

5.12 PS2 keyboard interface

PS/2

Input for connecting an external standard keyboard.

5.13 USB printer interface

USB Host socket for connecting a printer.

5.14 Mounting the Anybus module (COM5)

COM5 is set up by HBM as an optional interface for the Anybus® plug-in modules Modbus-TCP, PROFINET IO, CANopen and PROFIBUS DP. Only these modules are permissible, the behavior of the DWS2103 is not defined if other modules are used.

Take care when mounting the module. If the module is askew, the connection pins inside the DWS housing may get bent.

Procedure

1. Switch off the power supply for the DWS.
2. Place the DWS housing on a flat surface.
3. Remove the cover of the slot.

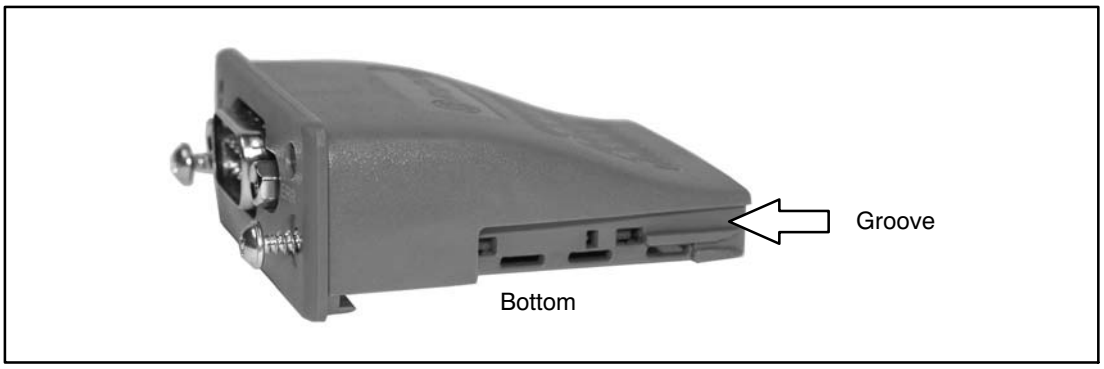

Fig. 5.6: Anybus® module

4. Push the module, with the flat side facing down, carefully into the housing. When the module protrudes approx. 1 cm from the housing, you will feel a resistance (see Fig. 5.7). The module will now be centered by the side grooves. Carefully push the module into the housing until it lies flush.

Fig. 5.7: Mounting the module

5. Tighten both fastening screws (Torx® 8; 0.25 N · m).
6. Switch the power supply to the DWS back on and activate the module in the menu “COMMUNICATION → FIELDBUS (COM5) → FUNCTION”.

6 Control and display functions

6.1 Device view

The front panel of the DWS2103 consists of the following elements:

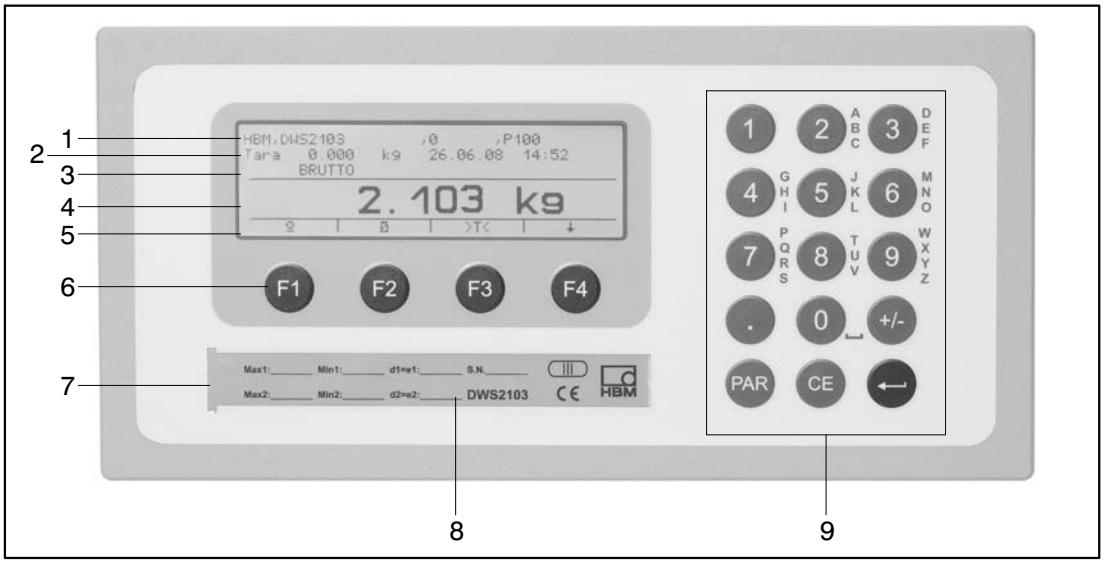

Fig. 6.1: DWS2103 front panel

1. Info line 1; configurable in the menu “Display → Display line 1”
2. Info line 2; configurable in the menu “Display → Display line 2”
3. Measured value status display
4. Measured value display
5. Function line (meaning of function keys F1 to F4)
6. Function keys F1 to F4
7. Hidden pushbutton for access to the calibration menu. The pushbutton can be accessed with a pointed object (when the label is removed). After calibration, the opening is sealed with the enclosed adhesive label or, for legal-for-trade applications, with the calibration label. Device calibration is protected in operation and can only be changed when this pushbutton is actuated.
8. Inspection window for inserting a labeling strip (for scale type plate with calibration data, device name, etc.).
9. Keyboard for entering numbers and letters

The connections for the serial interfaces and the terminals for the connecting cables are located on the back of the device.

6.2 Control elements

- Key PAR = Open parameter menu
- Key CE = Cancel input, exit parameter menu without applying changes
- Key ↵ = Apply input or setting and exit dialog
- Keys F1 to F4 = The function of the keys is displayed by the text or the symbols in the function line (Fig. 6.2) in the display
- Hidden pushbutton for access to the calibration menu (see Fig. 6.1).

6.3 Display

The display consists of the following elements:

Fig. 6.2: Display

Info line 1 and Info line 2

The content of Info lines 1 and 2 can be set by the user.

(Menu “DISPLAY→ DISPLAY LINE1” or “DISPLAY → DISPLAY LINE2”)

Status line

The status line is divided into 6 horizontal segments. The following symbols or texts are displayed, where applicable:

- →I1I←; →I2I←: Displays the currently valid weighing range. Nothing is displayed for just one weighing range
- GROSS, NET Indicates whether a gross measured value or a net measured value will be displayed.
- >0< Displayed when the measured value is 0 ± 0.25d (true zero).
- ⎽⎺ 1, 2 Displays the overshoot of set limit values 1 to 2.
- OVFL Overflow is displayed when at least one load cell or the entire scale is loaded with more than 160% of its maximum capacity.
- x10 10-fold resolution switched on

Measurement display

- The weight value is displayed with ± 7 digits with decimal point
- The physical unit is displayed with max. 4 characters

Function line

The function line has three levels, switch between levels with the F4 key. Level 3 (batching) is only displayed when the “Batching” operating mode is set. The significance of the function keys is shown together with the following symbols.

Function key, Level 1	F1	F2	F3	F4
Symbol	⊙		>T<	⬇
Significance	Print	Gross / net selection	Taring	To Level 2

Function key, Level 2	F1	F2	F3	F4
Symbol	J	X10	>0<	⬇
Significance	Scale type label	Ten-fold resolution	Zero setting	To Level 3

Function key, Level 3	F1	F2	F3	F4
Symbol	▶	■	□	⬇
Significance	Start batching	Stop batching	Delete batching result	To Level 1

Display illumination

LCD backlighting is always on once the power is connected

Display contrast

The LCD display contrast can be set in the menu “DISPLAY → CONTRAST” in 21 steps, from −10 to +10. The lowest contrast is −10 and the highest +10.

7 Basic scale functions

All device functions can be controlled in one or more of the following ways:

- Front control with 19 short-stroke keys. With the function keys F1 to F4, the meaning of the keys is displayed in the display function line.
- An external keyboard which can be connected via the PS2 input
- Connecting an external computer via the COM5 fieldbus interface

The main scale functions (Gross/Net, Taring, Zero setting) are controlled via function keys F1 to F4. For calibration and further device settings, a menu is called up with the key PAR (or F5 on the external keyboard). Scale operation is not interrupted during parameter input, right up to exiting the menu. When computer commands are used for control, measurement generally continues without interruption. The exceptions to this are settling after filter selection and power failsafe storage to the EEPROM.

7.1 Switching on and off

The device is switched on once the supply voltage is applied.

As soon as the electronics are switched on, a BUS SCAN is run, i.e. all load cells connected to the bus that could be used for communication are entered in PARAMETER MENU – DEVICE SELECTION.

During initial commissioning, all digital load cells:
– connected via the **RS485 BUS** have the same **address 31** (factory setting),
– connected via the **CAN BUS** have the same **address 63** (factory setting).

If more than one load cell is connected to DWS2103, the load cells must be configured before performing a scale adjustment (“INITIAL COMMISSIONING” chapter).

With verified scales, a check is made as to whether the parameters in the load cells have been changed. If the parameters in the load cells are no longer identical to those during verification, an error message is displayed but no measured values. With a verified scale configuration, there can only be communication with the load cells that were connected during the verification

During the BUS SCAN:

- **Information line 1** displays the identification string consisting of the manufacturer, TYPE, serial number and software version
- **Information line 2** displays the date and time
- **Measured value status line** displays the legal-for-trade counter status (TCR) and whether the scale is verified (LFT)

The actions carried out during initialization are displayed in clear text in the measured value display and the initialization progress is shown by a moving bar.

The scale must not be loaded when it is being switched on.

The device is switched off by disconnecting the supply voltage from DWS2103.

7.2 Zero setting the scale

Press key F4 until the symbol >0< appears above key F3.

Press key F3 to set the measured value to zero.

The displayed gross value is zero immediately after zero setting.

LEGAL setting	Range of zero setting, lower limit	Range of zero setting, upper limit
Not legal-for-trade	– 20 %	+ 20 %
OIML, NTEP	– 2 %	+ 2 %

The % figures relate to the nominal weighing range (“SCALE ADJUSTMENT → PARAMETER→NOMINAL (RATED) VALUE” parameter).

Execution is dependent on standstill recognition (Chapter 7.8, Page 40).

The net display is deactivated.

NOTE

Zero setting is only possible when the function in “PARAMETER MENU → FUNCTION KEYS → ZERO SETTING” has been set to ACTIVE.

7.3 Gross/net selection

Press key F4 until the symbol appears above key F2.

Every time key F2 is pressed, the display changes between gross and net. When selecting the net display, the last valid tare value is used again.

NOTE

Gross/net selection is only possible when the function in “PARAMETER MENU → FUNCTION KEYS → GROSS/NET” has been set to ACTIVE.

7.4 10-fold resolution

Press key F4 until the symbol *x10* appears above key F2.

Every time key F2 is pressed, 10-fold resolution is activated/deactivated. This mode can be used for test purposes. The measured value is then displayed with a factor 10 higher resolution.

NOTE

10-fold resolution is only possible when the function in “PARAMETER MENU → FUNCTION KEYS → 10-FOLD RESOLUTION” has been set to ACTIVE. If the scale is set to legal-for-trade OIML or NTEP, 10-fold resolution can only be activated while key F2 is pressed. Once F2 is released, 10-fold resolution deactivates after about 5 seconds.

7.5 Taring

Press key F4 until the symbol >T< appears above key F3.

Pressing key F3 stores the current gross value and deducts it from all the subsequent weight values. The displayed (net) value is zero immediately after taring. The tare value can be permanently displayed in the measured value display. The setting is made in menu “DISPLAY-DISPLAY-LINE1”, or “DISPLAY-DISPLAY-LINE2”. The tare value can be read in the “INFORMATION-TARE VALUE” menu item.

MODE → LEGAL-FOR-TRADE CAPABILITY	**Tare range, lower limit**	**Tare range, upper limit**
NO (not legal for trade)	−100 %	100 %
OIML, NTEP	>0	100 %

The % figures relate to the nominal weighing range
(“SCALE ADJUSTMENT → PARAMETER→NOMINAL (RATED) VALUE” parameter).

Execution is dependent on standstill recognition (Chapter 7.8, Page 40).

NOTE

Taring is only possible when the function in “PARAMETER MENU → FUNCTION KEYS → TARING” has been set to ACTIVE.

7.6 Zero on start-up

If this function is activated (parameter menu “SCALE ADJUSTMENT → PARAMETER → ZERO ON START-UP”), a weight value in the range ±2 to 20 % is automatically set to zero in accordance with the setting in the load cells for which this function is activated, when the load cells are switched on. This takes into consideration the set standstill condition.

7.7 Error displays

The permissible display range depends on the nominal (rated) value of the scale and the set mode of operation (not legal for trade / OIML / NTEP).

MODE → LEGAL-FOR-TRADE CAPABILITY	**Lower display limit**	**Upper display limit**
NO (not legal for trade)	–160 %	+160 %
OIML	–2 %	Nominal (rated) value + 9 d
NTEP	–2 %	Nominal value + 5 %

The percentages relate to the nominal weighing range (“NOMINAL (RATED) VALUE” parameter)

The following error message appears in the display when the measured value is

outside the maximum display range: ----------

Other errors are displayed as a four-digit code with explanation

(e.g. ERROR!

CODE 5700

No standstill

No measured value acquired)

They should not occur in normal operation (Chapter 18.2, Page 125).

7.8 Standstill recognition

The zero setting, taring and printing functions are only executed if the value in the display is stable. This is known as standstill and is indicated by showing the unit of measurement. The condition for standstill is that the value changes by no more than a specific fluctuation range per time unit. With fluctuating (wind) loads or a very high scale resolution, it is quite possible that standstill will never be achieved. In this case, a more strongly damping filter or a lower resolution must be selected in the parameter setting.

The various options for standstill indication can be selected in menu “SCALE ADJUSTMENT PARAMETER → STANDSTILL MON.”, see also Section 8.5.20 (Page 91).

It is also possible to switch off the standstill conditions (but not for legal-for-trade applications). The unit is always displayed when standstill monitoring is switched off.

8 Parameter menu

8.1 Calling the parameter menu

There are several ways to activate the parameter menu:

- Press the PAR **key**
- Press the hidden pushbutton
- Press key F5 on an external keyboard

The difference is the access to the legal / scale adjustment parameters:

Pressing the hidden pushbutton gives access to the legal-for-trade parameters of the first menu level (“PARAMETER MENU – FUNCTION KEYS, – MODE, – SCALE ADJUSTMENT, – COPY PARAMETERS, – FACTORY SETTINGS”), otherwise these parameters are only displayed.

8.2 Disabling / enabling menu functions

The parameter menu has so-called access levels (0 to 5). This feature is used to enable or disable user access to the parameters. Only those menu items that are enabled are displayed.

Access to change parameters is defined in the “PARAMETER MENU-MODE-ACCESS LEVEL” menu. Access level 0 disables most menus, access level 5 enables all parameter menus. The “PARAMETER-MODE-ACCESS LEVEL” menu is protected by the hidden pushbutton.

ACCESS LEVEL parameter	Enabled access levels
0	0 only
1	0 and 1
2	0 to 2
3	0 to 3
4	0 to 4
5	All

8.3 The main menu

To make things clearer, the parameters are grouped into several sub-menus, which can be called from the main menu. It is also possible to print out the parameters here (only when the printer interface is active). Certain parameters are not accessible in every mode of device operation, or are read-only. To make adjustments for legal-for-trade devices, it is necessary to actuate a hidden pushbutton, which is only accessible once the calibration or sealing label has been removed.

The parameter menu contains the following items:

Access level	Main menu level	Explanation	Legal-for-trade parameter[1)]
0	DEVICE SELECTION	Device selection (Chapter 8.5.1)	–
0	INFORMATION	Information (Chapter 8.5.2)	–
1	PRINT	Print (Chapter 8.5.3)	–
4	DISPLAY	Setting the Info line 1 and 2 contents, contrast (Chapter 8.5.6)	–
2	LIMIT VALUE	Limit values (Chapter 8.5.7)	–
2	PEAK VALUE	Peak values (Chapter 8.5.10)	–
2	TRIGGER	Trigger (Chapter 8.5.11)	–
2	BATCHING	Batching (Chapter 8.5.12)	–
4	COMMUNI-CATION	Interface settings (Chapter 8.5.13)	–
3	PRINT PROTOCOL	Print protocol settings (Chapter 8.5.14)	–
4	CLOCK	Real-time settings (Chapter 8.5.15)	–
4	FUNCTION KEYS	Function key assignments (Chapter 8.5.16)	Yes
4	SCALE CONFIGU-RATION	Filter, data rate (Chapter 8.5.17)	–
0	FUNCTION TEST	Test functions DWS2103 (Chapter 8.5.18)	–
0	MODE	Basic scale functions (Chapter 8.5.19)	Yes
4	SCALE ADJUSTMENT	Basic scale functions (Chapter 8.5.20)	Yes
5	COPY PARAMETERS	Copies all parameters (Chapter 8.5.21)	Yes
5	FACTORY SETTINGS	Resets to factory settings (Chapter 8.5.22)	Yes

1) Access only via hidden pushbutton

The LIMIT VALUE, TRIGGER and BATCHING menus are displayed subject to the selected mode of operation.
TRIGGER is not displayed when MODE – OPERATING MODE – 0: Standard
BATCHING is not displayed when MODE – OPERATING MODE – 1: Trigger
LIMIT VALUE is not displayed when MODE – OPERATING MODE – 2: Batching

8.4 Navigation in the parameter menu

The parameter menu has three levels. The first two levels are used for structuring the menu. Parameters are displayed and entered in the third level. All four keys (F1 to F4) are used for navigation in the parameter menu.

8.4.1 Navigation via device keys

Button	Explanation
PAR	Open parameter menu
CE	Return to higher menu level or exit parameter menu
↵	Go to sub-menu / change parameter (Enter)
	F1 to F4, depending on displayed function

The parameter menu is opened by pressing the key PAR.

Level 1

The selected parameter block is indicated by a black bar.

The required parameter block is selected with keys F2 or F3.

Use ↵ (Enter) to access the selected sub-menu. The sub-menu is then displayed in Info line 1.

Level 2

Use keys F2, F3 to select the required sub-menu and open it with the ↵ key (Enter).

Info line 1 displays the path Menu 1 – Menu 2
(e.g. COMMUNICATION – LOAD CELLS (COM1)

Navigate to the required parameter with keys F2, F3 and confirm your entry with ↵ (ENTER).

Level 3

The parameter is displayed and the actual setting indicated with a black bar and a * behind the set value.

Move the black bar with the arrow keys F2, F3 to the new setting and confirm with ↵ (ENTER).

The setting is applied and the sub-menu exited.

To cancel an entry without changing the parameter, exit the menu via the CE key.

8.4.2 Navigation via external keyboard

The external keyboard is connected to the PS2 connection (Fig. 5.2)

Significance of the keys	
External keyboard (PS2)	DWS2103 front panel
F1 to F4	F1 to F4
(Enter)	
ESC	CE
F5	PAR

The arrow keys can also be used for navigation.

Key F5 Open parameter menu

↑↓ Select parameter (similar to keys F2, F3)

→ Scroll to next level e.g. from level 1 to 2

← Scroll back to next level e.g. from level 2 to 1 (similar to CE)

8.5 Full menu structure

The description follows the main menu sequence (for the first level, see Chapter 8.3 (Page 42)).

8.5.1 “DEVICE SELECTION” parameter menu

Access: Key PAR , DEVICE SELECTION (Enter),

	Sub-menu explanation
DEVICE SELECTION	Access level 0

All the devices found during the BUS Scan (AED, FIT) are displayed in ascending address order. The black bar marks the active AED/FIT.

The second line shows the “IDN” identification string of manufacturer, device, serial number, software version.

CONNECTED LOAD CELLS			
HBM, PW2 MCR2 10 kg, 1749636784, P77.0			
Address	Serial no.	TCR	Status
12	1749636784	10	FIT3
BUS SCAN	↓	↑	3/
F1	F2	F3	F4

Display illustration: DEVICE SELECTION

Select AED/FIT with F2 or F3. Press (Enter) to make the selected AED/FIT the active device. The measured values and parameters of the active FIT are displayed.
F4 opens a dialog box, in which a new address can be assigned to the AED/FIT by means of the serial number.

Address			
Address :xyz Serial no. :1749636784			
↓	←	→	←x
F1	F2	F3	F4

Display illustration: Addressing

F1 runs a new BUS scan and displays the AED/FITs it finds.

8.5.2 “INFORMATION” parameter menu

Access: Key PAR , INFORMATION (Enter),

			Sub-menu explanation
INFORMATION			Access level 0
	SCALE		The type plate of the active AED/FIT is displayed
	DWS2103		The “IDN” of the DWS2103 manufacturer, device, serial number, software version, is shown in the top half of the display. The “IDN” of the active AED/FIT is shown in the bottom half. The legal-for-trade counter status TCR is displayed in both fields.
	TARE VALUE		The tare value with unit is displayed
	TRIGGER RESULT 1)		The Trigger result window contains all the information about the last trigger result of the AED/FIT that has been selected to be active. The current measured value is displayed in the top right window. The content of the Trigger window is overwritten each time there is a new trigger event. The set Trigger mode is shown on the left side of the window. Meaning: ACTUAL: The trigger result Number: Number of trigger events Mean: Mean value over the number of trigger results StDev: Standard deviation over the number of trigger results F4 Clears the Trigger result window
	WEIGHING RESULT		The last weight recorded by key F1 (print symbol) is displayed. It is displayed with the print no. and the date. The weight value is shown as a gross value or as a net value, with the associated tare value. Each time a new weight value is stored, the print no. increments. Meaning: F2, F3 Scroll through the weighing results F4 Clear the print number to find a weighing result

1) Is only shown if MODE→ OPERATING MODE → TRIGGER is set in the parameter menu

“INFORMATION” parameter menu (continued)

	BATCHING RESULT[1)]	↵	The display only appears when MODE/OPERATING MODE/Batching is set in the parameter menu. The Batching result window contains all the information about the last batching result of the AED/FIT that has been selected to be active. The current measured value and the batching status are displayed in the top right window. The content of the Batching window is overwritten each time there is a new batching result. Meaning: Target: Specified or target weight Actual: Batching result (actual weight) MV time Total batching time Coarse Coarse flow filling time Fine Fine flow filling time Number Number of batching processes Mean Mean over the number of batching processes StDev Standard deviation over the number of batching processes Total Total weight over the number of batching processes **F1** **Starts** a batching process **F2** **Stops** a batching process **F4** **Clears** the Batching result window

1) Is only shown if MODE→ OPERATING MODE → BATCHING is set in the parameter menu

“INFORMATION” parameter menu (continued)

	PEAK VALUE		Peak values are only displayed if they have been activated in the PEAK VALUE parameter menu. The net, gross or trigger measured value can be selected for monitoring for peak values. The current measured value is displayed in the top line, with below it, the value to be monitored for peak values. Min shows the smallest measured value to occur Max shows the largest measured value to occur Max-Min shows the difference between Max measured value and Min measured value **F4** **clears** the peak values previously recorded. **Min** is set to the largest possible value and **Max** to the smallest possible value.
	SOFTWARE INFO		The device software version is displayed with the software creation date.
	ERROR		The errors that occur are displayed in the **ERROR LIST** with an error number, date, time, load cell address and frequency.

8.5.3 “PRINT” parameter menu

The Print function is only accessible if COM3 is activated for printing.

Access: Key PAR , PRINT (Enter),

Sub-menu explanation			
PRINT			Access level 1
	MEASURED VALUE		Measured value sub-menu (Chapter 8.5.4)
	PARAMETERS		Sub-menu Print parameters (Chapter 8.5.5)

8.5.4 “PRINT – MEASURED VALUE” parameter menu

Access: Key PAR , PRINT MEAS. VALUE (Enter)

Sub-menu explanation			
PRINT			Access level 1
	MEASURED VALUE		Measured value sub-menu (Chapter 8.5.4)
	Prt01 – Measured value		Print protocol selection. Printing is initiated via key F1, when the symbol ⊙ is displayed.
	Prt02 – Trigger		
	Prt03 – Batching		
	Prt04 – Batching 2		

Protocols PRT01 to PRT04 are printed out and saved on the SD card. If there is no printer connected, they are only saved on the SD card.

The print function is described in Chapter 13 (Page 111).

8.5.5 “PRINT – PARAMETERS” parameter menu

Access: Key PAR , PRINT PARAMETERS (Enter)

Sub-menu explanation			
PRINT – PARAMETERS			Access level 1
	SCALE PARAMETERS		The adjustment parameters of the active scale are printed.
	DWS2103 PARAMETERS		The settings of the DWS2103 indicator are printed.
	BUS SCAN RESULT		The results of the BUS SCAN are printed.

The protocols in the “PRINT – PARAMETERS” parameter menu are **not** saved on the SD card during printout.

The print function is described in Chapter 13 (Page 111).

8.5.6 “DISPLAY” parameter menu

Whether the main display is to show the current measured value or the trigger result is specified in the DISPLAY dialog.
The contents of information lines 1 and 2 are specified, and the display contrast is set.

The following content can be displayed in information lines 1 and 2:

▬ :	Nothing is displayed in the selected segment
Scale ID:	Manufacturer, TYPE, serial number and software version. To display this information in full, both halves (left and right) of the information line are required. Left side of information line: Manufacturer and type Right side of information line: Serial number and software version
Address:	The address of the active AED/FIT is displayed
Error:	In the case of an error, the error number is displayed
Tare:	The actual tared weight is displayed
Inputs:	The status of the connected AED/FIT inputs is displayed **1** means input 1 is active (high level applied at input 1) **2** means input 2 is active (high level applied at input 2) If a blank field appears next to Inputs, both inputs are inactive. The level indication relates to the terminals of the basic AED device or the FIT inputs
Outputs:	The output control states are displayed A blank field means that no outputs are active 1 means that output 1 is active 2 means that output 2 is active 3 means that output 3 is active 4 means that output 4 is active Outputs 5 and 6 are not available in every AED/FIT 5 means that output 5 is active 6 means that output 6 is active

The following selection is only updated when in the PARAMETER MENU – “MODE – OPERATING MODE 1: trigger” is set.

T_RES	The trigger result is displayed
T_STD	Standard deviation of the trigger results
T_MW	Mean value of the trigger results
T_ANZ	Number of trigger results (number of weighed products)
T_STAT	The trigger status is displayed depending on the setting in PARAMETER MENU/PEAK VALUE (Gross, Net, Trigger)
MAX	Maximum peak value
MIN	Minimum peak value

The following selection is only updated when, in the PARAMETER MENU, “MODE – OPERATING MODE 2: Batching” is set.

D_SET	Parameter set currently in use: 0 to 31
D_FWT	Target weight currently in use
D_RES	Batching result, updated each time there is a new batching result
D_CFD	Coarse flow cut-off point
D_FFD	Fine flow cut-off point
D_TOT	Sum total of batching results (D_RES)
D_STD	Standard deviation of batching results (D_RES)
D_CNT	Number of batching processes (quantity)
D_MW	Mean value of batching results (D_MW)
D_STAT	Batching status
D_CFT	Coarse flow filling time
D_FFT	Fine flow filling time
D_DST	Entire batching time
Progress	The progress of the batching process is shown as a moving bar

These parameters are not dependent on the operating mode

TCR	Legal-for-trade counter
Date/Time	Actual date with time

Select the required entry with keys F2, F3 and apply with

Access: Key PAR , DISPLAY (Enter)

Sub-menu explanation				
DISPLAY			Access level 4	
	MAIN DISPLAY		Gross / Net	The gross or net values are displayed.
			Trigger result	The trigger result is displayed.
	DISPLAY LINE 1		LEFT	Display in left half of information line 1.
			RIGHT	Display in right half of information line 1
	DISPLAY LINE 2		LEFT	Display in left half of information line 2
			RIGHT	Display in right half of information line 2
	CONTRAST		–10* to 0 to +10	The contrast can be adjusted in 21 steps from –10 to +10.

*Factory settings

8.5.7 “LIMIT VALUE” parameter menu

NOTE

The menu is not active when “Mode – Operating Mode – Batching” is activated.

Access: Key PAR , LIMIT VALUE (Enter)

Sub-menu explanation				AED/ FIT Com-mand
LIMIT VALUE			Access level 2	
	LIMIT VALUE 1		Limit value 1 setting	LIV
	LIMIT VALUE 2		Limit value 2 setting	
	LIMIT VALUE 3		Limit value 3 setting	
	LIMIT VALUE 4		Limit value 4 setting	

8.5.8 “LIMIT VALUE – LIMIT VALUE 1” parameter menu

Access: Key PAR , LIMIT VALUE LIMIT VALUE 1 (Enter)

Sub-menu explanation					AED/ FIT com-mand
LIMIT VALUE – LIMIT VALUE 1 (–4)			Access level 2		
	FUNCTION		OFF	Limit value 1 is deactivated; no monitoring	LIV
			ON	Limit value 1 only active in the measured value status	
			ON and output	Limit value 1 is in measured value status and output (OUT1) is active.	
	INPUT SIGNAL		Selection of the input signal for limit value 1		
			NET*	The net measured value is monitored	
			GROSS	The gross measured value is monitored	
			TRIGGER	The trigger measured value is monitored	
			PEAK VALUES	The peak values are monitored	

“LIMIT VALUE – LIMIT VALUE 1” parameter menu (continued)

Sub-menu explanation				
LIMIT VALUE – LIMIT VALUE 1 (–4)			Access level 2	**AED/ FIT com-mand**
	ACTIVATION LEVEL	↵	The activation level is input as a weight value. If the input signal overshoots the activation level, the symbol for limit value 1 is displayed and the associated output becomes active.	**LIV**
	DEACTIVATION LEVEL	↵	The deactivation level is input as a weight value. If the input signal undershoots the deactivation level, the limit value 1 symbol disappears and the associated output is reset (depending on the “Function” setting).	

* Factory settings

Input activation level > deactivation level

If the selected measured value (gross, net, trigger or peak value) exceeds the set limit value 1 (2), this is displayed in the status line (⎽╱‾ 1,2). The associated output becomes active.

Input deactivation level > activation level

The limit value display (⎽╱‾ 1,2) is displayed in the status line and the associated output remains active until the measured value (gross, net, trigger or peak value) exceeds the set limit value 1 (2).

Outputs:

Outputs OUT1 to OUT4 are directly assigned to the limit values. OUT1 belongs to limit value 1, OUT2 to limit value 2, etc.

The outputs are available in the connected AED/FIT, ***the DWS2103 does not have any outputs.***

8.5.9 “LIMIT VALUE – LIMIT VAL. 2(-4)” parameter menu

Access: Key PAR , LIMIT VALUE ↵ LIMIT VALUE 2 ↵ (Enter)

Access: Key PAR , LIMIT VALUE ↵ LIMIT VALUE 3 ↵ (Enter)

Access: Key PAR , LIMIT VALUE ↵ LIMIT VALUE 4 ↵ (Enter)

Limit values 2-4 are set in the identical way to limit value 1 (Chapter 8.5.7).

8.5.10 “PEAK VALUE” parameter menu

Setting for which measured values peak values are to be recorded. The peak values are deleted when the supply voltage is switched on.

Access: Key PAR , PEAK VALUE (Enter)

Sub-menu explanation				AED/ FIT com-mand
PEAK VALUE			Access level 2	PVS
	Off		The function is deactivated. No peak values are recorded.	
	Net*		Net measured value monitoring (Min, Max, Max – Min)	
	Gross		Gross measured value monitoring (Min, Max, Max – Min)	
	Trigger		Trigger measured value monitoring (Min, Max, Max – Min). With this setting, only trigger results are recorded; “MODE – OPERATING MODE 1: Trigger” must be activated	

8.5.11 “TRIGGER” parameter menu

NOTE

The menu is not active when “Mode – Operating Mode – Standard” is activated.

Detailed information about the trigger function can be found in Application Note 011d “Querying trigger results”. The setting options are also described in the online document, FIT-AED-DOC.

Access: Key PAR TRIGGER, (Enter)

Sub-menu explanation					AED/ FIT com-mand
TRIGGER			Access level 2		
	TRIGGER MODE		Off		TRC
	Pre-Trigger: Trigger at the start of the weighing platform		Level, Pre-Trigger	Time of scale **loading**. The start of measurement acquisition after the trigger level has been exceeded.	
			External Pre-Trigger	External signal at IN1 triggers measurement acquisition.	
	Post-Trigger: Trigger at the end of the weighing platform		Level, Post-Trigger	Time of scale **load removal**. The value is below the trigger level and starts the algorithm for weight detection.	
			External Post-Trigger	External signal at IN1 starts the algorithm for weight detection	
	TRIGGER LEVEL			The set trigger value	
	SETTLING TIME		0 to 99	Time of measurement signal stabilization	
	MEASUREMENT TIME		0 to 99	Time of measurement signal acquisition	
	CORRECTION FACTOR		+ / –10 %	Corrects dynamic weighing deviations	TRF
	ZERO SETTING TIME		0 to 327 670 ms	Time between trigger and zero setting	CDT
	DYN. ZERO CORRECTION		TIME	s	DZT
			RANGE	+ / –1 d + / –2 d + / –5 d	

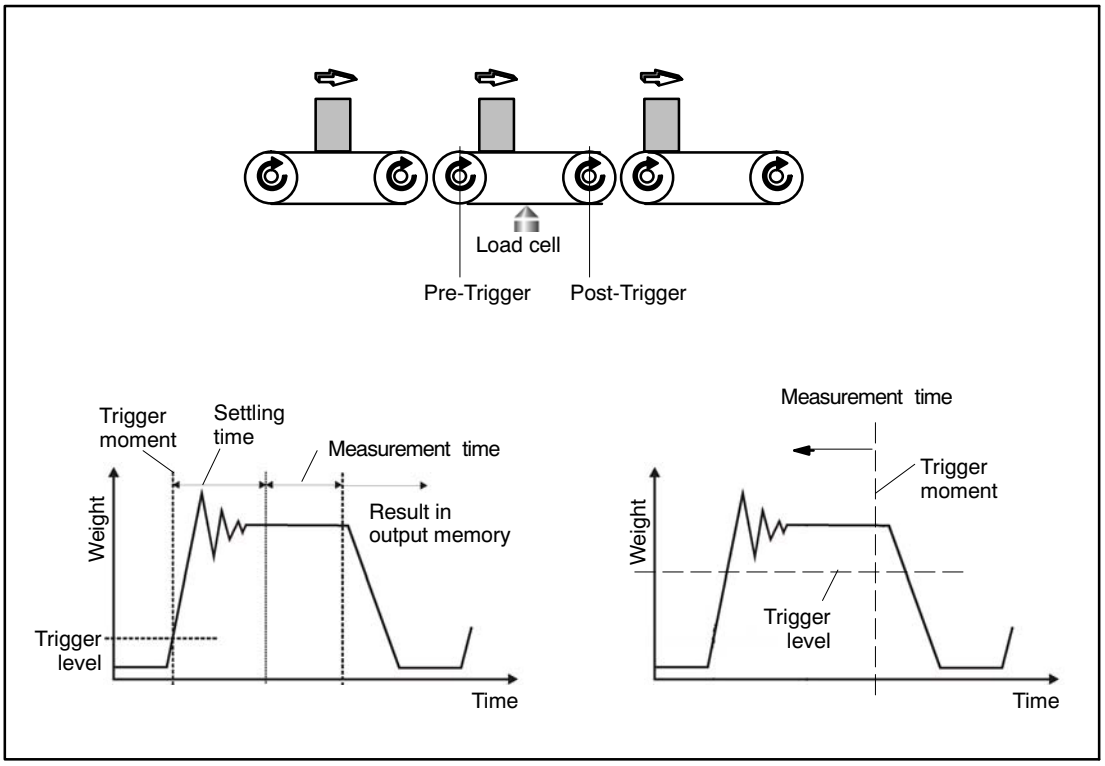

Fig. 8.5.7 Measurement signal evaluation in Pre and Post-Triggering

8.5.12 “BATCHING” parameter menu

NOTE

The menu is active when “Mode – Operating Mode – Batching” is activated.

Detailed information about the batching function can be found in Application Note 006d “Batching and filling with FIT/ AED”. The setting options are also described in the online document, FIT-AEDDOC.

Access: Key PAR , BATCHING (Enter)

Sub-menu explanation					AED/ FIT com-mand
BATCHING			Access level 2		
	PARAMETER SET		**0 to 31** Selection of the batching parameter set to be worked with (there are 32 independent batching parameter sets available). When a new or different parameter set to the one previously in use is entered, the settings of the previously used parameter set are saved. **NOTE** All entries apply to the selected parameter set. All references to inputs or outputs apply to the connected AED/FIT. The DWS2103 itself does not have any inputs or outputs.		**RDP**
	WEIGHT PARAMETERS Entry of all the parameters used in the units of mass, for the selected parameter set		FILLING WEIGHT	Entry of target weight: 5 to 100 % of nominal (rated) value (not legal-for-trade: 0 to 100 % of nominal (rated) value). The filling weight is on the AED/FIT characteristic curve specified in the scale adjustment menu and is the target weight for a batching process. It is entered in weight units.	**FWT**

“BATCHING – WEIGHT PARAMETERS” parameter menu (continued)

Sub-menu explanation					AED/ FIT com-mand
BATCHING			Access level 2		
			COARSE FLOW CUT-OFF	Is automatically set to 50% of the filling weight for the FILLING WEIGHT entry. Entry in the range 0 to (FINE FLOW CUT-OFF – MIN FINE FLOW). The coarse flow cut-off point setting cannot be greater than the fine flow cut-off point, so this means: **Coarse flow cut-off point max. = Fine flow cut-off point minus Min. fine flow**	**CFD**
			FINE FLOW CUT-OFF	Is set to 95% of the filling weight for the filling weight entry. In the range 0 to 120% of nominal (rated) value. If FINE FLOW CUT-OFF is set to a value < COARSE FLOW CUT-OFF, COARSE FLOW CUT-OFF is automatically set to the value (FINE FLOW CUT-OFF – MIN. FINE FLOW).	**FFD**

“BATCHING - WEIGHT PARAMETERS” parameter menu (continued)

Sub-menu explanation					AED/ FIT com-mand
BATCHING			Access level 2		
			COARSE BAG BREAKAGE	Entry of bag breakage monitoring during the coarse flow phase, 0 to 160 % of the nominal (rated) value. The bag breakage detection function is dependent on the WEIGHT PARAMETERS and the COARSE BAG BREAKAGE TIME PARAMETERS (“BATCHING” chapter).	**CBK**
			FINE BAG BREAKAGE	Entry of bag breakage monitoring during the fine flow phase, 0 to 160 % of the nominal (rated) value. The bag breakage detection function is dependent on the WEIGHT PARAMETERS and the FINE BAG BREAKAGE TIME PARAMETERS (“BATCHING” chapter).	**FBK**

“BATCHING - WEIGHT PARAMETERS” parameter menu (continued)

Sub-menu explanation					AED/ FIT com-mand
BATCHING			Access level 2		
			UPPER TOL. LIMIT	Is automatically set to 100.2 % of the filling weight for the filling weight entry. Entry in the range 0 to 160 % of the nominal (rated) value. If the batching result exceeds the set tolerance value, bit 5 = 1 is set in the batching status. When outputs function = 0, output OUT4 is active (see outputs function). The identifier “tolerance overrun” is cleared on next startup.	**UTL**
			LOWER TOL. LIMIT	Is automatically set to 99.8 % of the filling weight for the filling weight entry. Entry in the range 0 to 160 % of the nominal (rated) value. If the batching result falls below the set tolerance value, bit 6 = 1 is set in the batching status. When outputs function = 0, output OUT5 is active (see outputs function). The identifier “tolerance underrun” is cleared on next startup.	**LTL**

“BATCHING - WEIGHT PARAMETERS” parameter menu (continued)

Sub-menu explanation					AED/ FIT com-mand
BATCHING			Access level 2		
			MIN. FINE FLOW	Is automatically set to 1 % of the filling weight for the filling weight entry. Entry in the range 0 to 120 % of the nominal (rated) value. The minimum fine flow component indicates how close the coarse flow cut-off point can be taken to the fine flow cut-off point. This means that when the fill material has pieces, you can set the coarse flow to fine flow interval in such a way that the batching process always ends with fine flow. When the fill material has pieces, the minimum fine flow component setting should always be slightly more than the heaviest piece. The coarse flow cut-off point must not be less than 0, even if the setting is minimum fine flow > fine flow cut-off point.	FFM
			NOTE To obtain the most consistent batching result possible, it is important to set the minimum fine flow component in such a way that the batching process always ends with fine flow.		

“BATCHING - WEIGHT PARAMETERS” parameter menu (continued)

Sub-menu explanation					AED/ FIT com-mand
BATCHING			Access level 2		
			SYST. DEVIATION	The setting range is ±5 % of the nominal (rated) value. The systematic difference can be used to adjust the material that is typically removed from or added to a canister after checkweighing. It can also be used to better maintain an unsymmetrical tolerance. A positive value indicates that more is to be put in (target weight + systematic difference and a negative value that less is to be put in (target weight – systematic difference).	**SYD**

“BATCHING - WEIGHT PARAMETERS” parameter menu (continued)

Sub-menu explanation					AED/ FIT com-mand
BATCHING			Access level 2		
			MIN. START-WEIGHT	Limit value, in the range 0 to 160% of the nominal (rated) value, which must be exceeded for batching to begin. If the actual gross value is less than the MIN start weight, the batching process does not start. A range in which the batching start is performed is defined together with the empty weight. These two functions work independently of one another. If the minimum start weight = 0, this function is deactivated (factory setting). This function is not performed for deduction weighing.	**MSW**
			EMPTY WEIGHT	Limit value, in the range 0 to 160% of the nominal (rated) value, up to which taring can still be performed; when the empty weight is exceeded, taring no longer occurs, and coarse or fine flow is completed, depending on the weight. Empty weight = 0 means that the function is deactivated, taring will occur for each weight < coarse flow off.	**EWT**

“BATCHING” parameter menu (continued)

Sub-menu explanation					AED/ FIT com-mand
BATCHING			Access level 2		
	TIME PARAMETERS Entry of all the parameters used in time units for the selected parameter set		TARING DELAY	Range 0 to 327.67 s. Delay after batching starts until taring. If it is established at the start that the empty weight or the coarse flow cut-off point has been exceeded, there is no delay and there is no taring either (for exception see batching mode).	**TAD**
			START WITH FINE FLOW	Range 0 to 327.67 s Fine flow phase before coarse and fine flow batching. START WITH FINE FLOW = 0 means that the function is deactivated. This additional fine flow time before coarse flow can be used to avoid the coarse flow causing excessive foaming in the liquid being filled. This function does not work in downward batching mode.	**FFL**

“BATCHING - TIME PARAMETERS” parameter menu (continued)

Sub-menu explanation					AED/ FIT com-mand
BATCHING			Access level 2		
	TIME PARAMETERS (continued)		COARSE BAG BREAKAGE	Range 0 to 327.67 s Setting the monitoring interval for bag breakage detection (see the bag breakage monitoring Chapter [1]). The coarse bag breakage differential weight setting must be greater than zero. Bag breakage monitoring starts after the coarse lockout time and is deactivated when coarse flow ends.	**CBT**
			FINE BAG BREAKAGE	Range 0 to 327.67 s Setting the monitoring interval for bag breakage detection (see the bag breakage monitoring Chapter [1]). The fine bag breakage differential weight setting must be greater than zero. Bag breakage monitoring starts after the fine lockout time and is deactivated when fine flow ends.	**FBT**

[1] Detailed information about the batching function can be found in Application Note 006d “Batching and filling with FIT/ AED”. The setting options are also described in the online document, FIT-AED-DOC.

“BATCHING - TIME PARAMETERS” parameter menu (continued)

Sub-menu explanation					AED/ FIT com-mand
BATCHING			Access level 2		
	TIME PARAMETERS (continued)		MAX. BATCHING TIME	Range 0 to 3276.7 s (approx. 55 minutes) The maximum batching time is a monitoring time for the batching process. It starts when batching starts (key F1 in PARAMETER MENU/INFORMATIO N/BATCHING RESULT or control input activation on the AED/FIT) and ends with checkweighing (ready signal). If the maximum batching time is exceeded, batching is aborted, the coarse flow and fine flow outputs are inactive and an error message is generated (OUT4, see OUTPUTS FUNCTION setting).	**MDT**

“BATCHING - TIME PARAMETERS” parameter menu (continued)

Sub-menu explanation					AED/ FIT com-mand
BATCHING			Access level 2		
	TIME PARAMETERS (continued)		COARSE LOCKOUT TIME	Range 0 to 327.67 s Throughout the period set, once coarse flow is activated, there is no actual weight comparison when the coarse flow cut-off point is reached. Based on experience, this time should be about 10 % of the coarse batching time. If coarse flow bag breakage monitoring is used, the time must be long enough for material to reach the container within the lockout time. When coarse flow is enabled and the product to be weighed is flowing into the container, it may be, especially when the fill material has pieces, that the first parts to clatter onto the load cell generate peak loads, that could lead to overrunning the coarse flow cut-off point.	**LTC**

“BATCHING - TIME PARAMETERS” parameter menu (continued)

Sub-menu explanation					AED/ FIT com-mand
BATCHING			Access level 2		
	TIME PARAMETERS (continued)		FINE LOCKOUT TIME	Range 0 to 327.67 s. The lockout time for fine flow assessment starts when the coarse flow cut-off point is reached and throughout the period set, disables the actual weight comparison when the fine flow cut-off point is reached. When coarse flow is deactivated, there may be settling, which could overrun the fine flow cut-off point. Experience shows that the time is about 10 % of the fine batching time. This time does not delay the filling process.	**LTF**

“BATCHING - TIME PARAMETERS” parameter menu (continued)

Sub-menu explanation					AED/ FIT com-mand
BATCHING			Access level 2		
	TIME PARAMETERS (continued)		RESIDUAL FLOW TIME	Range 0 to 327.67 s. The residual flow time starts once the fine flow cut-off point is reached and lasts for the period of time set. During this time, material is captured that has still to flow into the canister after fine flow is deactivated. Only a minimal amount of material should flow into the container during residual flow and this amount should be the same for each batching process, if possible. It is important for proper optimization and for an accurate actual weight value for the residual flow to be captured. This time will depend greatly on the delivery instruments. The residual flow time does not actually make the batching process any longer, because if you do not capture the material, batching will be inaccurate.	**RFT**

“BATCHING - TIME PARAMETERS” parameter menu (continued)

Sub-menu explanation					AED/ FIT com-mand
BATCHING			Access level 2		
	TIME PARAMETERS (continued)		STABILIZATION TIME	Range 0 to 327.67 s. Check weighing occurs during this time (the actual weight is measured). Check weighing is performed within the time set at standstill. If there is no standstill within the stabilization time, the actual weight is established in any case once the stabilization time expires. If standstill monitoring is deactivated, that means a standstill and checkweighing commences immediately, without waiting. The actual weight captured after the stabilization time is also the basis for optimization.	**STT**
			EMPTYING TIME	Range 0 to 327.67 s. Emptying can be performed via the ready signal output OUT3. If emptying time is deactivated (EPT = 0), output OUT3 works as a ready signal, that is to say, it is active after checkweighing and is only reset on the next start. If an emptying time (**EPT** > 0) is entered, output OUT3 works as an emptying output, it is active after checkweighing and reset after the emptying time has expired.	**EPT**

“BATCHING” parameter menu (continued)

Sub-menu explanation					AED/ FIT com-mand
BATCHING			Access level 2		
	CONTROL PARAMETERS Entry of all the parameters to control the batching process for the selected parameter set		EMPTYING MODE	**WEIGHT** Emptying continues, output OUT3 active, until the weight falls below that set in PARAMETER MENU/BATCHING/ WEIGHT PARAMETERS/ EMPTYWEIGHT. **TIME** The time set in PARAMETER MENU/BATCHING/ TIME PARAMETERS/ EMPTYING TIME defines the emptying period. (Output OUT3 active).	**EMD**
			AUTO TARE	**Off** Once batching starts, taring is not performed; a set TARE DELAY is not required. **On** After batching starts, taring occurs once the set TARE DELAY has expired and then coarse and fine flow are enabled. If the measured value > empty value, taring does **not** occur.	**TMD**

“BATCHING - CONTROL PARAMETERS” parameter menu (continued)

	CONTROL PARAMETERS		OPTIMIZATION	**0** = optimization is deactivated **1** = highest level of optimization **3** = lowest level of optimization The MIN. FINE FLOW setting is important for optimization to work well. This value must be set so that optimization can only bring the coarse flow cut-off point close enough to the fine flow cut-off point for there still to be fine flow after coarse flow, that is, the batching process will always end with fine flow.	**TMD**0
			OUTPUTS FUNCTION	This setting can influence the meaning of the outputs on the AED/FIT.	

The table provides information about the various possible settings and their meaning in the relevant outputs

Setting	**Meaning of the outputs**					
	OUT1	OUT2	OUT3	OUT4	OUT5	OUT6
00*	Coarse flow	Fine flow	Ready signal/ Emptying	Tolerance+	Tolerance –	Alarm
01	Coarse flow	Fine flow	Ready signal/ Emptying	Tolerance error	irrelevant	
02	Coarse flow	Fine flow	Ready signal/ Emptying	Alarm	irrelevant	

* Factory settings

“BATCHING - CONTROL PARAMETERS” parameter menu (continued)

Sub-menu explanation					AED/ FIT com-mand
BATCHING			Access level 2		
			DOSING MODE	**Upward** Container filling operating mode **Downward** Material is taken from a filled container, with the container being the weigher. In this operating mode, the EMPTY WEIGHT parameter specifies the minimum weight that must still be in the container at the start. If the EMPTY WEIGHT = 0, the minimum weight in the container must be greater than the filling weight.	**DMD**

“BATCHING - CONTROL PARAMETERS” parameter menu (continued)

Sub-menu explanation					AED/ FIT com-mand
BATCHING			Access level 2		
			REDOSING	The redosing function allows a container to be topped up if at the start and/or after checkweighing it is established that the filled weight is in the range between Fine flow off and Lower tolerance. Redosing has no effect on the optimization function. **0** Redosing is deactivated. There is no redosing. With settings 1 to 3, you can specify the actual time when redosing is checked; the following condition must be met for it to be performed: **Fine flow cut-off point < current measured value** **< lower tolerance limit** **1** Redosing at the start **2** Redosing after checkweighing **3** Redosing at the start and/or after checkweighing	**RDS**

“BATCHING - CONTROL PARAMETERS” parameter menu (continued)

Sub-menu explanation					AED/ FIT com-mand
BATCHING			Access level 2		
			VALVE CONTROL	This command sets the mode of operation for triggering coarse and fine flow. This allows the user to adapt the control to the particular type of valve being used **0** The valve is always triggered to open with coarse and fine flow. When the coarse flow cut-off value is reached, the coarse flow output is inactive. If triggering occurs in the fine flow phase (redosing, or when starting from a stopped state), coarse and fine flow are enabled together and coarse flow is then deactivated again immediately, as soon as there is a weight increase. **1** The valve is triggered to open with coarse flow and fine flow when the coarse flow phase comes first. When the coarse flow cut-off value is reached, the coarse flow output is inactive. If triggering occurs during the fine flow phase (for example, when redosing or when starting from the stopped state), only the fine flow valve is triggered.	**VCT**

“BATCHING - CONTROL PARAMETERS – VALVE CONTROL” parameter menu (continued)

Sub-menu explanation					AED/ FIT com-mand
BATCHING			Access level 2		
			VALVE CONTROL	**2** The coarse flow and fine flow outputs are always t riggered separately (never simultaneously). In the coarse flow phase, only the coarse flow valve is active. In the fine flow phase, only the fine flow valve is active. **3** The coarse flow output is activated by starting and stays active until Fine Flow Off. The fine flow output is also active during fine flow. Coarse flow: coarse flow output active fine flow output inactive Fine flow: coarse flow output active fine flow output active.	**VCT**
			SPECIAL FUNCTIONS	Special monitoring functions (empty weight monitoring and extended error output functions (Alarm) can be set under this menu item. If several functions are activated, the SDF value must be added up.	**SDF**

SDF value	Function
1	When batching starts, the empty weight is monitored and if measured value > empty value, the batching process is **not** started, so there is also no redosing at the start.
2	Output alarm during bag breakage
4	Output alarm during gross/net/ADC value overflow or underflow
8	Output alarm during batching time overrun
16	Alarm during deduction weighing (**DMD** = 1) and gross value < **FWT**.
32, 64, 128	Not in use, reserved for later enhancements

“BATCHING” parameter menu (continued)

Sub-menu explanation				
BATCHING			Access level 2	
	COPY PARAMETERS		WEIGHT PARAMETERS	All the weight parameters of the active parameter set are copied to a parameter set, 1 to 31. The target parameter set (1 to 31) must be entered.
			TIME PARAMETERS	All the time parameters of the active parameter set are copied to a parameter set, 1 to 31. The target parameter set (1 to 31) must be entered.
			CONTROL PARAMETERS	All the control parameters of the active parameter set are copied to a parameter set, 1 to 31. The target parameter set (1 to 31) must be entered.
			ALL PARAMETERS	All the parameters (weight, time and control parameters) of the active parameter set are copied to a parameter set, 1 to 31. The target parameter set (1 to 31) must be entered.
			COPY TO ALL	All the batching parameter sets of the active device are copied to all the devices connected at the BUS. The order must be confirmed again before copying.

8.5.13 “COMMUNICATION” parameter menu

Access: Key PAR , COMMUNICATION (Enter)

Sub-menu explanation				
COMMUNICATION			Access level 4	
	LOAD CELLS (COM1)		FUNCTION	UART* CAN
			CHANNEL	MAIN*, Diagnostic
			UART BAUD RATE	9.6k, 19.2k, 38.4k*, 57.6k, 115.2k
			BAUD RATE CAN	10k, 20k, 50k*, 125k, 250k, 500k, 800k, 1M
			2-WIRE COMM.	OFF: **Full duplex** Separate transmission-reception lines 4-wire ON*: **Half duplex** Common transmission and reception line 2-wire
	PC/PLC (COM2)		FUNCTION	OFF * Interface is inactive ON Interface is active
			BAUD RATE	Baud rate setting for processor communication: 1.2K, 2.4K, 4.8K, 9.6K *, 19.2K, 38.4K, 57.6K, 115.2K
			PARITY	NONE*, EVEN, ODD

* Factory settings

	Only with UART function

“COMMUNICATION” parameter menu (continued)

	PRINTER (COM3)		FUNCTION	OFF* Interface is inactive ON (RS232) Serial interface is active ON (USB) USB interface- is active
			BAUD RATE **	1.2K to 9.6k* to 115.2K
			PARITY**	NONE, EVEN * ODD
			PROTOCOL**	DTR * Hardware handshake DC1 Software handshake
	EXT. DISPLAY (COM4)		FUNCTION	OFF * Interface inactive String 1 String 2 see String 3 Chapter 14 String 4 String 5
			STANDARD-DISPLAY[1)]	– none microSYST MIGRA (numerical display) microSYST MIGAN (graphical display)
			PROTOCOL	OFF * No handshake DTR Hardware handshake DC1 Software hand-shake
			BAUD RATE	1.2K to 115.2K
			PARITY	NONE*, EVEN, ODD
			START STRING LENGTH	0* = No start string 1 to 15 = Number of characters for start string
			END STRING LENGTH	0* = No end string 1 to 5 = Number of characters for end string

* Factory settings

	For RS232 interface only

“COMMUNICATION” parameter menu (continued)

			CRC	OFF No checksum ON * Checksum
			DECIMAL POINT	POINT* COMMA OFF No decimal point
			PAUSE [10ms]	Time until display string is repeated
			MEASURED VALUE LENGTH	Number of measured value digits that can be displayed Standard (9 digits) 2 to 9 digits for the measured value

* Factory settings

1) When connecting and selecting a standard display, the interface COM4 is automatically configured, no further settings are required under EXT. display (COM4). For specifications for the standard displays, please refer to the manufacturer’s documentation.

8.5.14 “PRINT PROTOCOL” parameter menu

Access: Key PAR , PRINT PROTOCOL (Enter)

Sub-menu explanation			
PRINT PROTOCOL			Access level 3
	PRINTOUT NUMBER		Consecutive number of printout
	USER-DEFINED LINE 1		A maximum of 32 text characters can be entered for printout in line 1.
	USER-DEFINED LINE 2		A maximum of 32 text characters can be entered for printout in line 2.
	USER-DEFINED LINE 3		A maximum of 32 text characters can be entered for printout in line 3.
	BLANK LINES ABOVE		0 to 99 blank lines above the printout of USER DEFINED LINE 1
	BLANK LINES BELOW		0 to 99 blank lines below the printout of USER DEFINED LINE 3
	SPACES		0 to 99 spaces
	PAGE-FEED		OFF* After printing, no page feed is performed ON Page feed after printout
	PRINT COPIES		Number of printouts (0; 1; 2; 3)
	ESCAPE1 (CHAR. 1) to ESCAPE1 (CHAR. 5)		Entry of an ESCAPE sequence that consists of a maximum of 5 characters. The characters are entered as ASCII characters with their decimal value.
	ESCAPE2 (CHAR. 1) to ESCAPE2 (CHAR. 5)		Entry of an ESCAPE sequence that consists of a maximum of 5 characters. The characters are entered as ASCII characters with their decimal value.

* Factory settings

2 ESCAPE sequences can be entered with ESCAPE1 and ESCAPE2. Each ESCAPE sequence consists of a maximum of 5 characters.

8.5.15 “CLOCK” parameter menu

The date consists of xx.yy.zz (DAY/MONTH/YEAR). When entering the DAY or MONTH, inputs of 01 to 31 and 01 to 12 are permissible; if a number combination outside 01 to 31 and 01 to 12 is entered, the previous value is displayed again and the dialog is not exited. DAY, MONTH and YEAR must always be entered with 2 digits.

The 24-hour or 12-hour mode can be selected for the time display.

Access: Key PAR , CLOCK (Enter)

Sub-menu explanation				
CLOCK			Access level 4	
	DATE		DAY	The day is a 2-digit entry from 01 to 31
			MONTH	The month is a 2-digit entry from 01 to 12
			YEAR	The year is a 2-digit entry from 00 to 99
	TIME		MODE	24h 24 hour mode 12h 12 hour mode
			MINUTES	Enter 00 to 59 minutes
			HOURS	In 24h mode: 00 to 23 In 12h mode: 00 to 12 Use F1 to toggle AM/PM

8.5.16 “FUNCTION KEYS” parameter menu

The meaning of the FUNCTION KEYS is displayed in the function line. The function line is changed with F4.

The applicable functions are enabled/disabled in the Function keys dialog.

Access: Key PAR , FUNCTION KEYS (Enter)

			Sub-menu explanation		AED/ FIT com-mand
FUNCTION KEYS			Access level 4		
	ZEROING		INACTIVE	The zeroing function is not available in measuring mode	CDL
			ACTIVE*	In measuring mode, function key F3 (level 3) is assigned with the zeroing function (>0<)	
	TARING		INACTIVE	The taring function is not available in measuring mode	TAR
			ACTIVE*	In measuring mode, function key F3 (level 2) is assigned with the taring function (>T<)	
	GROSS/NET		INACTIVE	The GROSS/NET selection function is not available in measuring mode	TAS
			ACTIVE*	In measuring mode, function key F2 (level 2) is assigned with the Gross/Net function	
	10-FOLD RESOLUTION		INACTIVE*	The 10-fold resolution function is not available in measuring mode	–
			ACTIVE	In measuring mode, function key F2 (level 3) is assigned with the 10-fold (x10) resolution function	
	PRINT		INACTIVE*	The print function is not available in measuring mode	–
			ACTIVE	In measuring mode, function key F2 (level 3) is assigned with the print (⦿) function	

* Factory settings

8.5.17 “SCALE CONFIGURATION” parameter menu

Access: Key PAR , SCALE CONFIGURATION (Enter)

Sub-menu explanation					AED/ FIT com-mand
SCALE CONFIGURATION			Access level 4		
	FILTER		FILTER MODE	0 – IIR2 1 – FIR32 2 – IIR8 3 – IIR4FT 4 – FIR64	**FMD**
			CUT-OFF FREQUENCY	0 to 10	**ASF**
			COMB FILTER 1	0 to 63	**NTF**
			COMB FILTER 2	0 to 63	
	DATA RATE		0 to 7	Data rate in the active AED/FIT	**ICR**
	HIGH SPEED DATA RATE		Standard	max. 600 MV/s	**HSM**
			High Speed	max. 1200 MV/s	
	TARE VALUE		Input tare measured value		**TAV**

* Factory settings

8.5.18 “FUNCTION TEST” parameter menu

In the FUNCTION TEST menu, the function of the interfaces, display, keys and the SD card can be checked.

Access: Key PAR , FUNCTION TEST (Enter)

Sub-menu explanation				
FUNCTION TEST			Access level 4	
	BUS SCAN		A search is made for all digital load cells connected to COM1. All the digital load cells found are displayed with their address, serial number, legal-for-trade counter status and overload counter status. A load cell can be selected with keys F2 and F3. The line above the table displays the manufacturer, type, serial number and software version of the selected load cell.	
	LOAD CELL or AED component		LOAD CELL TEST	Check selected FIT/AED
	COM1		COM1 test	At COM1 (load cell interface) the capital letter U (0x55) is permanently output. If the transmission outputs TB and TA are connected to the inputs RB and RA, the transmitted character is received again and displayed. In COM1 test, the number of transmitted and received characters are displayed. No load cells must be connected at the interface when checking COM1.

FUNCTION TEST parameter menu (continued)

	COM2	↵	COM2 test	The capital letter U (0x55) is permanently output at the selected interfaces COM2 (PC/PLC), COM3 (printer) and COM4 (second display). If the transmission output Tx is connected to the reception input Rx, the sent character is received again and displayed. The number of transmitted and/or received characters is displayed.
	COM3	↵	COM3 test	
	COM4	↵	COM4 test	
	SD CARD	↵	SD test	The internal memory card is checked and the free memory displayed in bytes.
	DISPLAY	↵	Display test	Various patterns are displayed in the display field for the display test.
	KEYS	↵	Key test	The corresponding key code is displayed if the key is recognized when a key is pressed. The exception is the **CE** key, as pressing the CE key ends the KEY test.

8.5.19 “MODE” parameter menu

The following functions are set in the MODE menu:

LANGUAGE (see following table for explanation)

ACCESS LEVEL

The ACCESS LEVEL menu is used to specify which menus are still accessible to the user (see right column in following table). If the DWS2103 is verified, the access levels can only be changed via the hidden key. The access levels can be set in 5 levels.

LEGAL-FOR-TRADE CAPABILITY (see following table for explanation)

Weights and measures regulation and class settings. If the DWS2103 has been set to OIML; NTEP, this setting can only be cancelled via the hidden key.

ENCRYPTION (see following table for explanation)

OPERATING MODE (see following table for explanation)

Access: Key PAR , MODE (Enter)

Sub-menu explanation					AED/ FIT com-mand
MODE			Access level 0		
	LANGUAGE		ENGLISH	Menu texts and dialog in English	
			DEUTSCH*	Menu texts and dialog in German	
			РУССКИЙ	Menu texts and dialog in Russian	
			FRANCAIS	Menu texts and dialog in French	
			ITALIANO	Menu texts and dialog in Italian	
			ESPANOL	Menu texts and dialog in Spanish	
			CATALA	Menu texts and dialog in Catalan	
			PORTUGUES	Menu texts and dialog in Portuguese	
	OPERATING MODE		0: Standard 1: Trigger 2: Batching		**IMD**
	ACCESS LEVEL		0	**Enabled menus:** INFORMATION FUNCTION TEST MODE	
			1	**Enabled menus:** INFORMATION PRINT FUNCTION TEST MODE	

* Factory settings

MODE - ACCESS LEVEL parameter menu (continued)

			2	**Enabled menus:** INFORMATION PRINT LIMIT VALUE FUNCTION TEST MODE
			3	**Enabled menus:** INFORMATION PRINT LIMIT VALUE PRINTER FUNCTION TEST MODE
			4	INFORMATION PRINT LIMIT VALUE FILTER COMMUNICATION PRINTER CLOCK FUNCTION KEYS DISPLAY FUNCTION TEST MODE
			5*	All menus are accessible
	LEGAL-FOR-TRADE CAPABILITY		NO*	Not verified
			OIML	
			NTEP	
	ENCRYPTION		OFF*	The measured values are transmitted unencrypted.
			ON	The measured values are transmitted encrypted. In verified operation, this setting can only be changed via the hidden key.

* Factory settings

8.5.20 “SCALE ADJUSTMENT” parameter menu

The following functions are set in the “SCALE ADJUSTMENT ∠ PARAMETERS” menu:

MANUFACTURER	**(see following table for explanation)**
IDENTIFICATION	**(see following table for explanation)**
LOAD CELL DATA RATE	**(see following table for explanation)**
UNIT	**(see following table for explanation)**

The unit is displayed with the measured value and is also used for standstill checking. A visible unit of measurement means standstill.

DECIMAL POINT

x = no decimal place
x.x = one decimal place
x.xx = two decimal places, etc.

NOMINAL VALUE

The nominal (rated) value must be entered numerically correctly with all places.
E.g. 50kg with 5000 division resolution entry: 50.00 kg

MULTIRANGE

The measuring range is displayed in measured value status.
Example: 100.00 kg scale MULTIRANGE 1 50.00 kg
0 to 50 kg measuring range 1 resolution 10g >|1|<
50 to 100 kg measuring range 2 resolution 20g >|2|<

RESOLUTION

Increment entry. The value determines the resolution of the last place(s)
E.g.: Nominal (rated) value = 50.00 kg = 5000d
Resolution = 1d Total resolution = 5000d
Resolution = 2d Total resolution = 2500d
Resolution = 5d Total resolution = 1000d
In multi-range scales, the increment is automatically increased when switching to the next range. The resolution for the first range must be entered.
E.g. 2-range scale set, resolution = 1d
Weight < MR 1 Resolution 1d
MR 1 < Weight Resolution 2d
MR = multirange

The settings made are also entered into the electronic type plate (Menu “INFORMATION → SCALE”)

ZERO TRACKING

The automatic zero tracking occurs for a gross or net measured value <0.5d in the range + 2% of the nominal value of the scale. The maximum reset speed is 0.5 d/s when the scale is at standstill. Standstill recognition can be set in the parameter Standstill monitoring. The unit d (digit) is equal to one verified scale division **e**.

ZERO ON START-UP

Zero on start-up means that, when the scale is switched on, a weight up to max. ±20 % of the nominal (rated) value is set once to zero. In legal-for-trade applications, a max. of ±10% of the nominal (rated) value can be set to zero. Zero setting is only implemented at a standstill and when the weight is within the specified range. Possible settings are OFF, ±2 %, ±5 %, ±10 % and ±20 % of the nominal (rated) value.

STANDSTILL MONITORING

Standstill check. Standstill means that the weight does not change by more than the set value in one second. Standstill is indicated by the unit of measurement. If the standstill condition is not met, the unit of measurement is not displayed. The setting 1d/s applies for a verified scale.

The following settings are possible:

OFF Standstill monitoring is disabled, the display is always in the standstill mode, the unit of measurement is permanently displayed.

0.25d/s Standstill is when the weight value does not change in one second by more than 0.25d.

0.5d/s Standstill is when the weight value does not change in one second by more than 0.5d.

1d/s Standstill is when the weight value does not change in one second by more than 1d.

2d/s Standstill is when the weight value does not change in one second by more than 2d.

3 d/s Standstill is when the weight value does not change in one second by more than 3d.

Example:
If a resolution of 1g and standstill monitoring of 1d/s is set, the standstill condition is met when the weight value does not change by more than 1g/s.

G-FACTOR CALIBRATION /APPLICATION

The g-factor setting is only required when the scale is calibrated at the production site and operated at another place with this setting. If the scale is calibrated at the place of installation, both g-factors must be identical.

Access: Key PAR , SCALE ADJUSTMENT (Enter)

Sub-menu explanation					AED/ FIT com-mand
SCALE ADJUSTMENT		Access level 4			
	PARAMETERS		MANUFACTURER	Enter a manufacturer ID with max. 3 letters. This designation can be found in the scale ID.	
			IDENTIFICATION	Enter a type designation or name with max. 15 characters.	**IDN**
			UNIT	Enter a unit of mass with max. 4 letters.	**ENU**
			DECIMAL POINT	Enter the number of decimal places.	
			NOMINAL VALUE	Enter the maximum scale capacity. The decimal point and unit must be set beforehand.	**NOV**
			MULTIRANGE	Changeover point from measuring range 1 to measuring range 2.	**MRA**
			RESOLUTION	1d*; 2d; 5d; 10d; 20d; 50d; 100d;	**RSN**
			ZERO TRACKING	OFF* ON	**ZTR**
			ZERO ON START-UP	OFF* ±2 % ±5 % ±10 % ±20%	**ZSE**

* Factory settings

1) The actual data rates in measurements/sec can be found in the documentation of the load cells used (measuring chains).

“SCALE ADJUSTMENT - PARAMETERS” parameter menu (continued)

			Sub-menu explanation		AED/ FIT com-mand
SCALE ADJUSTMENT			Access level 4		
			STANDSTILL MONITORING	OFF* 0.25 d/s 0.5 d/s 1 d/s 2 d/s 3 d/s	**MTD**
			G-FACTOR CALIBRATION	Enter g (gravitational acceleration) at calibration location e.g. 98104	
			G-FACTOR APPLICATION	Enter g (gravitational acceleration) at operating location e.g. 98109	
	CHARACT. CURVE ENTRY	↵	CALIBRATION WEIGHT	The calibration weight must be set to the maximum capacity.	**CWT**
			ZERO LOAD	Enter the value for the unloaded scale in internal digits.	**LDW**
			MAXIMUM CAPACITY	Enter the value for the scale loaded with the maximum capacity.	**LWT**
	CHARACT. CURVE MEASUREMENT	↵	CALIBRATION WEIGHT	The calibration weight is entered in weight units. It should be min. 20% and max. 120% of the maximum scale capacity. An adjustment of up to 5% of the maximum scale capacity is also possible for non-verifiable scales. It must be noted that the smaller the balancing weight is, the greater the full scale error.	**CWT**

“SCALE ADJUSTMENT - CHARACTERISTIC CURVE MEASUREMENT” parameter menu (continued)

Sub-menu explanation					AED/ FIT com-mand
SCALE ADJUSTMENT			Access level 4		
			ZERO LOAD	The measured value for the unloaded scale is displayed in internal digits. When the display is settled, the value is applied with ↵ and the dialog exited.	**LDW**
			MAXIMUM CAPACITY	The measured value for the scale loaded with the calibration weight is displayed in internal digits. When the display is settled, the value is applied with ↵ and the dialog exited.	**LWT**
	LINEARIZATION see Chapter 11 “Linearization”	↵	WEIGHT 1		
			MEASURED VALUE 1		
			MEASURED VALUE 1 ENTRY		
			WEIGHT 2		
			MEASURED VALUE 2		
			MEASURED VALUE 2 ENTRY		
	LINEARIZ. COEFF.	↵	PARAMETER 0		**LIC**
			PARAMETER 1		
			PARAMETER 2		
			PARAMETER 3		

A characteristic curve adjustment must be performed before linearization. After the characteristic curve adjustment, two interpolation points can also be entered to compensate the linearity error.

WEIGHT 1(2) Enter a known weight value. The weight value must be on the previously defined characteristic curve. The associated measured value can either be measured with measured value 1(2) or if known, entered under “Measured value 1 entry”.

Measured value 1 Load scale with weight 1. Apply measured value with ↵ .

Measured value 1 entry Enter the measured value of the scale loaded with weight 1.

WEIGHT 2 Similar sequence to weight 1

Weights 1 and 2 must be entered in ascending order.

8.5.21 “COPY PARAMETERS” parameter menu

Access: Key PAR , COPY PARAMETERS (Enter)

Sub-menu explanation			
COPY PARAMETERS			Access level 5
	LIMIT VALUES		The limit value settings of the active AED/FIT are copied to all the AED/FITs connected at the bus.
	PEAK VALUES		The peak value settings of the active AED/FIT are copied to all the AED/FITs connected at the bus.
	TRIGGER		The trigger value settings of the active AED/FIT are copied to all the AED/FITs connected at the bus.
	BATCHING		The batching value settings of the active AED/FIT are copied to all the AED/FITs connected at the bus.
	SCALE		The values of the active AED/FITs entered in the Scale adjustment – Parameters parameter menu are copied to all the AED/FITs connected at the bus.
	ADJUSTMENT		The values of the active AED/FITs entered in the Scale adjustment – Characteristic curve parameter menu are copied to all the AED/FITs connected at the bus.
	ALL		All the active AED/FIT parameters listed above are copied to all the AED/FITs connected at the bus.

If the devices connected at the bus are set to legal-for-trade (LFT>0 or switch), the parameters cannot be copied.

8.5.22 “FACTORY SETTINGS” parameter menu

Access: Key PAR , FACTORY SETTINGS (Enter)

Sub-menu explanation			
FACTORY SETTINGS			Access level 5
	IDENTIFICATION		Enter a type name for the DWS2103 that is individual to the user side.
	DWS2103		The display is reset to the factory settings.
	DEVICE		The active AED/FIT is reset to the factory settings.

9 Filter selection

Various filters are available in AED/FIT. These can be selected via the “SCALE CONFIGURATION-FILTER-FILTER MODE” parameter menu:

- Standard filter (IIR low-pass filter)
- Fast-settling filter (FIR low-pass filter)
- IIR 8th order low-pass filter
- Fast-settling digital filter (IIR 4th order low-pass filter)
- Fast-settling digital filter (FIR low-pass filter)

The filter cut-off frequency is adjustable in 10 steps (0 to 9). The settings are made in the “SCALE CONFIGURATION-FILTER-CUT-OFF FREQUENCY” parameter menu.

Setting 0 means that the filter is disabled.

The particular application determines which filter mode is selected.

A low bandwidth has a longer settling time and should be selected for greater accuracy.

Scale resolution (“NOMINAL VALUE” parameter) and standstill recognition are interlinked. If standstill is not achieved, the filter bandwidth must be reduced.

NOTE

The filters are part of the load cells, their properties are described in the documentation for the load cells (AED/FIT, measuring chains). (Commands **FMD**, **ASF**, **HSM**).

10 Scale adjustment

The scale is adjusted by setting the user characteristic curve in the SCALE ADJUSTMENT parameter menu, that is to say, the weighing electronics adapt to the actual digital load cell output signals supplied by the digital load cell(s) when the scale is not loaded or at nominal weight. Calibration weights are usually required for this, although the alternative is to enter the measured values, if these are known.

The characteristic curve adjustment is saved in the AED/FIT. The characteristic curve can only be adjusted in non legal-for-trade operation.

The following method is available to adjust a scale.

Scale adjustment by measuring the characteristic curve
This method is described in Chapters 10.2 to 10.5 or in Application Note 004d, “Notes on static scale adjustment with FIT and AED”.

10.1 Configuration of the load cells

During initial commissioning, all AED/FITs have the same address (31), a measured value display is not possible and the display shows an initialization error [INIT ERROR].

Each load cell must be assigned its own address. This is possible with the aid of the load cell serial number.

Proceed as follows:

- The parameter menu must be called via the hidden key
- “DEVICE SELECTION” parameter menu

NOTE

If the load cells have already been assigned individual addresses (e.g. with the AED panel), measured values are displayed after switching on and you can start directly with scale adjustment.

10.2 Prerequisites for scale adjustment

Before the scale can be adjusted, the nominal (rated) range of the scale and other parameters must be set.

The prerequisites here are:

- The parameter menu must be called via the hidden switch
- Parameter menu “MODE-ACCESS LEVEL” = 5 (access to all menus)
- Parameter menu “MODE-LFT CAPABILITY” = OFF (LFT application disabled)
- Set parameter menu “SCALE PARAMETERS-PARAMETERS → UNIT-DECIMAL POINT-NOMINAL VALUE-RESOLUTION”.
- Set parameter menu “SCALE PARAMETERS-PARAMETER-G-FACTOR CALIBRAT.” to the gravitational acceleration value of the adjustment location
- Parameter menu “SCALE PARAMETERS-PARAMETER-G-FACTOR APPLICATION” = G-FACTOR CALIBRAT. (disable gravitational acceleration correction)
- Disable linearization in “SCALE PARAMETERS-LINEARIZATION” parameter menu: WEIGHT1 = WEIGHT2 = MEASURED VALUE1 = MEASURED VALUE2 = 0)

See Chapter 8.5.17 (Page 86) and 8.5.19 (Page 89).

The parameters of the active AED/FIT are set.

10.3 Scale adjustment with maximum capacity (standard method, calibration weight = nominal (rated) value)

In most scale applications, the adjustment is made at two points, that is to say, when the scale is not loaded and when a calibration weight is placed on it. Calibration is carried out as follows:

1. Call up the “SCALE PARAMETERS” parameter menu.
2. Check that the calibration weight is the same as the maximum capacity (calibration weight = nominal (rated) value).
3. Go to the “CHARACTERISTIC CURVE MEASUREMENT” (measurement) sub-menu.
4. Zero value:
   - The scale is not loaded
   - Call the “ZERO LOAD” sub-menu
   - The actual measured value is displayed with internal resolution
   - Wait for a steady measured value display
   - Press the *“ENTER”* key to store the value
5. Calibration weight:
   - Place the calibration weight (= maximum scale capacity) on the scale
   - Call up the “MAXIMUM CAPACITY” sub-menu
   - The actual measured value is displayed with internal resolution
   - Wait for a steady measured value display
   - Press the *“ENTER”* key to store the value

Use the *“CE”* key to cancel at any time. This will reset the parameter that has just been called (and this one only!) to its former value. The former value is only deleted after storing.

The two values are stored internally at high resolution (internal digits).

If the measured value display is too unsteady, reduce the filter bandwidth (Chapter 9, Page 98).

The other parameters must then be set.

10.4 Scale adjustment with partial load (calibration weight = 20 (5) to 120 % of nominal (rated) value)

If there is no calibration weight available to correspond to the maximum scale capacity, nominal (rated) value, a partial calibration can be performed. The “CALIBRATION WEIGHT” parameter must be set to the value of the calibration weight used. This must be in the range 5 % to 120 % of the maximum scale capacity. In legal-for-trade applications, the adjustment should be carried out with a calibration weight of at least 20% of the maximum scale capacity. The calibration weight is scaled like the display value
(e.g. 2 kg = 2.000, with 3 decimal places).

Until a calibration has been performed, the calibration weight is the same as the nominal (rated) value.

NOTE

Before calibration, the parameter “SCALE PARAMETERS → PARAMETERS → NOMINAL VALUE” must be set to the maximum scale capacity!

Calibration is carried out as follows:

1. Call up the “SCALE PARAMETERS” menu
2. Go to the “CHARACTERISTIC CURVE MEASUREMENT” (measurement) sub-menu
3. Set the calibration weight [CALIBRATION WEIGHT]
4. Zero value:
   - The scale is not loaded
   - Call up the “ZERO LOAD” sub-menu
   - The actual measured value is displayed with internal resolution
   - Wait for a steady measured value display
   - Press the *“ENTER”* key to store the value
5. Calibration weight:
   - Place the calibration weight (= CALIBRATION WEIGHT) on the scale
   - Call up the “MAXIMUM CAPACITY” sub-menu
   - The actual measured value is displayed with internal resolution
   - Wait for a steady measured value display
   - Press the *“ENTER”* key to store the value

Use the *“CE”* key to cancel at any time. This will reset the parameter that has just been called (and this one only!) to its former value. The former value is only deleted after storing.

The two values are stored internally at high resolution (internal digits). The other parameters must then be set.

If the measured value display is too unsteady, reduce the filter bandwidth (Chapter 9, Page 98)
The other parameters must then be set. The characteristic curve is saved in the active AED/FIT.

10.5 Adjustment without calibration weight (computational adjustment)

If there is no calibration weight available, an adjustment can be performed by entering the calculated values.

When scales have vast maximum capacities, it is often not possible to use calibration weights for adjustment. The AED/FITs connected to the DWS2103 are calibrated at the factory to output a measured value of 1000000 at maximum capacity.

The user characteristic curve can therefore be determined from the known nominal (rated) value of the load cells. The zero value is defined by automatic measurement, but the nominal (rated) value is defined by manual entry.

All load cells connected to a scale must have the same maximum capacity.

Procedure

1. Measuring the zero value of the characteristic curve when the scale is not loaded:

- Call up the “SCALE PARAMETERS” parameter menu
- Go to the “CHARACTERISTIC CURVE MEASUREMENT” (measurement) sub-menu
- Zero value:
  - The scale is not loaded
  - Call the “ZERO LOAD” sub-menu
  - The actual measured value is displayed with internal resolution (The displayed value is, for example, dependent on the number of load cells).
  - Wait for a steady measured value display
- Make a note of the measured value (mv0) for later entry

2. Calculating the nominal (rated) value of the scale:

The digital load cells (e.g. C16i) connected to the DWS2103 are calibrated at the factory to output a measured value of 1000000 at maximum capacity. The nominal value of the scale characteristic curve is composed of the zero value and the weighing range. As the zero value has already been measured, it only remains to define the weighing range.

$$\text{Weighing range} = \text{Load cell sensitivity [digits]} \cdot \frac{\text{Maximum scale capacity}}{\text{Maximum load cell capacity}}$$

The load cell sensitivity is 1000000 at maximum load cell capacity. The maximum load cell capacity is stated on the load cell type plate. The following applies:

Maximum scale capacity < Maximum load cell capacity

The weighing range result is therefore a value in internal resolution (digits)

3. Entering the characteristic curve

If you add the value for the weighing range to the previously measured zero value, you obtain the nominal (rated) value of the scale (mv1). The characteristic curve can now be entered:

- Call up the “SCALE PARAMETERS” parameter menu
- Go to the “CHARACTERISTIC CURVE ENTRY” sub-menu
- “CALIBRATION WEIGHT” menu. Enter the weight with which the adjustment was made
- Call up “ZERO LOAD” menu and enter the measured value for unloaded scale (mv0)
- Call up the “MAXIMUM CAPACITY” menu
- Enter the nominal (rated) value (mv1)

Scales with several load cells supply the nominal (rated) output signal (1000000 or the nominal (rated) value entered under SCALE PARAMETERS-PARAMETERS-NOMINAL VALUE), if the weight available is the maximum capacity.

NOTE

Adjustment in digits (internal resolution) does not achieve the same accuracy as adjustment with calibration weights and must therefore only be used for applications which require less accuracy.

10.6 Multi-range weighing machine

The DWS2103 can be operated as a single-range or dual-range balance.

The MULTIRANGE parameter is available in the “SCALE PARAMETERS-PARAMETERS” parameter menu for this purpose. The weighing range (NOMINAL VALUE) must be set before this setting.

Scale type	Parameters
Single-range balance	MULTIRANGE = 0
Dual-range balance	Weight value after which range 2 is switched to.

The increment for the second weighing range is automatically derived from the “RESOLUTION” parameter, whereby this parameter always describes the increment of the first measuring range:

Example:
“RESOLUTION” = 1 d → Increment for range 2 = 2 d

10.7 Taking gravitational acceleration into account

The gravitational acceleration, and thus the scale display, is dependent on the geographical data of the place of installation. The maximum variation between the different regions within the Federal Republic of Germany is 0.1%; worldwide, it is 0.6%.

The function described below allows adjustment to take place on the scale manufacturer’s premises, even if the device is to be operated at a different geographical location.

If the fault effect at the new installation location exceeds the scale accuracy limits, it is usually necessary to re-adjust. But instead of this, it is also possible to use an internal correction function in the DWS2103 to compensate for the effect of the installation location.

To do this, enter the following in the “SCALE ADJUSTMENT → PARAMETERS parameter menu, (access authorization required!):

- G-FACTOR CALIBRATION = gravitational acceleration factor for the calibration location
- G-FACTOR APPLICATION = gravitational acceleration factor for the destination location (where the scale is used)

This must be entered after scale adjustment.

Use the setting G-FACTOR CALIBRATION = G-FACTOR APPLICATION to disable the correction calculation. The display is then always related to the location of the last calibration.

NOTE

This setting is not required if the scale is adjusted on site.

11 Linearization

For most scale applications, standard adjustment with the zero and full scale values (“ENTRY” or “MEASUREMENT”) is sufficient. The signal only needs to be linearized (“LINEARIZATION”) if unacceptable errors occur with this method. Linearization corrects errors when scale structures have an output signal that is not proportional to the weight (e.g. because there are mechanical transmission elements).

Correction selection via the “SCALE PARAMETERS → LINEARIZATION” menu:

Calibration steps	Zero value, full scale value[1)]	Two additional calibration weights	Two additional calibration weights
Recommended for:	Standard application	Structures with a linearity error	Structures with a linearity error
Possible to correct following errors:	Error proportional to the measured value	One maximum of the error char. curve	Two maximums of the error char. curve
Example: (Scale output signal error, as per OIML)	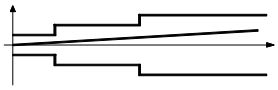	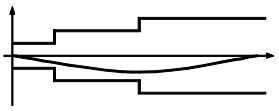	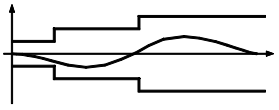

1) Zero and full scale value adjustment is already described in Chapter 10.

For the linearization method, proceed as follows:

- Set the scale parameters
- Calibrate the scale at 2 points (zero weight and calibration weight)
- Measure the linearity error in the weighing range with two additional calibration weights

NOTE

Correction is only possible when performing measurements. Entry only makes sense when the linearity adjustment has been implemented and the determined values are reset for test purposes and now need to be entered again.

Linearization always takes place at two measurement points (actual values). First establish whether the error characteristic curve has one or two maximums (see above).

If the error characteristic curve has one maximum, the first measurement point is put at about 500 d = e (the narrowest part of the error characteristic curve). The second measurement point is put at the maximum of the error characteristic curve.

If the error characteristic curve has two maximums, the first measurement point is put at the first maximum. The second measurement point is put at the second maximum of the error characteristic curve.

The table below shows an extract from the parameter menu:

SCALE PARAMETERS-LINEARIZATION			Access level 4
	WEIGHT 1		Setpoint entry for measurement point 1
	MEASURED VALUE1		The measured value of the scale loaded with weight 1 is displayed and accepted with Enter.
	MEASURED VALUE 1 ENTRY		If the measured value for weight 1 is noted, it can be entered again here.
	WEIGHT 2		Setpoint entry for measurement point 2
	MEASURED VALUE 2		The measured value of the scale loaded with weight 2 is displayed and accepted with Enter.
	MEASURED VALUE 2 ENTRY		If the measured value for weight 2 is noted, it can be entered again here.

Procedure for adjustment:

- The scale is already adjusted in its weighing range
- Any existing linearization is disabled
  (weight 1 = weight 2 = measured value 1 = measured value 2 = 0))
- Call up the “Weight 1” sub-menu
- Enter the value for calibration weight 1
- Load the scale with calibration weight 1
- Call up the “Measured value 1” sub-menu, the measured value is displayed with internal resolution
- Wait until the measured value display is steady
- Press “Enter” to store the value (the first value pair is recorded)
- Call up the “Weight 2” sub-menu
- Enter the value for calibration weight 2
- Load the scale with calibration weight 2
- Call up the “Measured value 2” sub-menu, the measured value is displayed with internal resolution
- Wait until the measured value display is steady
- Press the “Enter” key to store the value

After entry and measurement of both interpolation points, the linearization coefficient is calculated. The characteristic curve is linearized.

The linearization coefficient is saved in the active AED/FIT.

12 Legal-for-trade applications

Once the scale parameters are set and the scale adjusted in the “SCALE PARAMETERS” parameter menu, the DWS2103 must be set to legal-for-trade applications (OIML or NTEP) using the “Mode → LFT capability” parameter menu. This protects the legal-for-trade parameters of the DWS2103 and the load cells against further change and the legal-for-trade counter, which cannot be reset, increases by one. The maximum number for the legal-for-trade counter is 9 999 999. It does go over this and cannot be reset.

Legal-for-trade counter (TCR) display:

There are two methods for TCR display:

1. Select permanent TCR in INFO line 1 or 2 (DISPLAY-DISPLAY-LINE 1 or DISPLAY-DISPLAY-LINE 2 parameter menu)
2. In the scale label (key F1 when “i” is displayed in the function line, switch function line with F4)

TCR stands for “Trade Counter”.

NOTE

The DWS2103 does **not** check whether the parameter settings made are valid under OIML R76 or NTEP!

Before exiting the “MODE” menu, the “Access authorization” parameter must be set accordingly in the “MODE-ACCESS LEVEL” parameter menu.

Parameter ACCESS:

The various menu levels have what are called access authorizations. The “MODE → ACCESS LEVEL” parameter is used to define the access for changing parameters. The level with the most restrictions is zero. This feature is used to restrict user access to these parameters. The “MODE → ACCESS LEVEL” parameter is protected by the hidden pushbutton. The applicable access level for each parameter is specified in the parameter description.

ACCESS parameter	Enabled access levels
0	0 only
1	0 and 1
2	0 to 2
3	0 to 3
4	0 to 4
5	All, HBM setting

Legal-for-trade parameters in the main menu:

Access level	Main menu level	Explanation	Legal-for-trade parameter [1]
0	DEVICE SELECTION	Device selection (Chapter 8.5.1)	–
0	INFORMATION	Information (Chapter 8.5.2)	–
1	PRINT	Print (Chapter 8.5.3)	–
4	DISPLAY	Setting the Info line 1 and 2 contents, contrast (Chapter 8.5.6)	–
2	LIMIT VALUE	Limit values (Chapter 8.5.7)	–
2	PEAK VALUE	Peak values (Chapter 8.5.10)	–
2	TRIGGER	Trigger (Chapter 8.5.11)	–
2	BATCHING	Batching (Chapter 8.5.12)	–
4	COMMUNI-CATION	Interface settings (Chapter 8.5.13)	–
3	PRINT PROTOCOL	Print protocol settings (Chapter 8.5.14)	–
4	CLOCK	Real-time settings (Chapter 8.5.15)	–
4	FUNCTION KEYS	Function key assignments (Chapter 8.5.16)	Yes
4	SCALE CONFIGURATI ON	Filter, data rate (Chapter 8.5.17)	–
0	FUNCTION TEST	Test functions DWS2103 (Chapter 8.5.18)	–
0	MODE	Basic scale functions (Chapter 8.5.19)	Yes
4	SCALE ADJUSTMENT	Basic scale functions (Chapter 8.5.20)	Yes
5	COPY PARAMETERS	Copies all parameters (Chapter 8.5.21)	Yes
5	FACTORY SETTINGS	Resets to factory settings (Chapter 8.5.22)	Yes

[1] Access only via hidden pushbutton

The LIMIT VALUE, TRIGGER and BATCHING menus are displayed subject to the selected mode of operation.
TRIGGER is not displayed when MODE – OPERATING MODE – 0: Standard
BATCHING is not displayed when MODE – OPERATING MODE – 1: Trigger
LIMIT VALUE is not displayed when MODE – OPERATING MODE – 2: Batching

[1] Access only via hidden pushbutton

When you now exit the parameter menu “MODE”, all the legal-for-trade parameters are protected (display only, changes cannot be made).

The legal-for-trade counter can be read in the “INFORMATION → SCALE” menu (Chapter 8.5.2, Page 46).

Fill out the supplied insertion strip in accordance with the set application and insert in the front foil. Then attach the calibration and sealing label to secure the hidden switch and insertion strip.

The calibration label is applied according to the applicable national legislation.

The parameter menu can now only be called up via the PAR key.

If the scale has to be re-adjusted or new parameters have to be set that are relevant to verification, proceed as follows:

- Remove the calibration label and the insertion strip
- Call the parameter menu via the hidden key
- Change the “MODE → LFT CAPABILITY” parameter to NO
- The parameter “MODE → ACCESS LEVEL” must be set to five

Setting the parameter to legal-for-trade application produces the following display and tare ranges:

MODE → LFT CAPABILITY	Display, lower limit value	Display, upper limit value
NO (not legal-for-trade)	–160 %	160 %
OIML	–2 %	Nominal (rated) value + 9 d
NTEP	–2 %	105 %

MODE → LFT CAPABILITY	Tare range, lower limit	Tare range, upper limit
NO (not legal-for-trade)	–100 %	100 %
OIML, NTEP	>0	100 %

MODE → LFT CAPABILITY	Range of zero setting, lower limit	Range of zero setting, upper limit
NO (not legal-for-trade)	– 20 %	+ 20 %
OIML, NTEP	– 2 %	+ 2 %

The % figures relate to the nominal weighing range (“SCALE PARAMETERS → PARAMETERS “NOMINAL VALUE” menu).

The weighing electronics must be labeled and sealed in accordance with the scale application. Different labeling strips are included for use as a Class III and IIII non-automatic scale. The labeling strip must contain at least the following data:

Max Maximum scale loading
Min Minimum scale loading
e Increment
Type Name of scale
S.N. Individual serial number of scale

In the case of legal-for-trade scales, verification must be performed by a Notified Body, in accordance with current national laws. The sealing and calibration labels must be attached in accordance with the approval.

13 Print function

A printer can be connected to the COM3 serial interface (RS232) or the USB printer interface of the DWS2103, to print out the weight values.

13.1 Activating the printer interface

Access: Key PAR , COMMUNICATION PRINTER (Enter)

			Sub-menu explanation	
	FUNCTION		Selecting the printer interface	
			OFF	COM3 and USB disabled
			ON (COM3)	Serial printer connection active (RS232)
			ON (USB)	USB printer connection active

If the USB printer interface is used, no further settings are necessary, the following menu is only displayed when COM3 is selected as the serial printer connection.

			Sub-menu explanation
	BAUD RATE		The following baud rates can be set: 1.2k, 2.4k, 4.8k, 9.6k, 19.2k, 38.4k, 57.6k and 115.2k Bd
	PARITY		The following settings can be selected for parity: None – Even – Odd
	PROTOCOL		The DWS2103 has **two transmission protocols** to the printer **DTR** = Hardware protocol controlled via the DTR signal **DC1** = Software protocol controlled with DC1/DC3

* Factory settings

13.2 DWS2103 – printer connection

The DWS2103 is equipped with a COM3 serial printer output and a USB printer connection. Interface selection is described in Chapter 8.5.13, Page 80.

Printer connection

COM3	Standard printer cable 9-pin SUB-D. The assignment of the COM3 interface is described in Chapter 5.10, Page 28.
USB	Standard USB cable

13.3 Print protocol selection

The Print function is only accessible if COM3 or USB is activated for printing.

			Sub-menu explanation	
PRINT			Access level 4	
	MEASURED VALUE	↵	Selection of print protocol Prt01 to Prt04	
	PARAMETERS	↵	SCALE PARAMETERS	Printout of AED/FIT parameters
			DWS2103 PARAMETERS	Printout of DWS2103 parameters
			BUS SCAN RESULT	Printout of load cells connected to the DWS2103

* Factory settings

13.4 Starting printing

- In the measured value display with key F1, when the symbol for printing ⊙ is displayed above F1.

  The symbol ⊙ is only displayed when the function in Parameter menu – Function keys – Print has been set to ACTIVE.

  If the symbol ⊙ is not displayed above F1, press F4 to change the assignment of the function keys until the ⊙ print symbol is displayed.

What is printed out depends on the operating mode of the scale and always corresponds to what is shown on the display. Printing only takes place when there is standstill, so the unit of measurement is always printed out. With non legal-for-trade applications, printing can take place as often as required.

With a legal-for-trade setting, the printout cannot be repeated. There must be a change in weight and a renewed standstill before there can be a new printout. There is no printing outside the display limits.

Every measured value printout with print protocol PRT01 is stored in the ALIBI memory on the SD card.

13.5 Different print protocols

- Prt01-Measured value: Gross or NET and Tare
- Prt02-Trigger: Trigger result
- Prt03-Batching: Batching result
- Prt04-Batching 2: Extended batching result

Prt01 measured value protocol:

	User-defined line 1				
	User-defined line 2				
	User-defined line 3				
	Date		:	**xx.xx.20xx**	
	Time		:	**xx.xx**	
	Device address (ADR)		:	**xx**	
	Scale ID		:	**xxxxxxx**	
	Serial number		:	**xxxxxxx**	
	Printout No.		:	**xxxxxxx**	
	Weight	**G**	:	**xxx.xx**	**kg**
or	**Weight**	**N**	:	**xxx.xx**	**kg**
(if net)	**Tare**		:	**xxx.xx**	**kg**

The first three lines (Identstring 1 to 3) can be input via the

parameter menu – Print protocol user defined line 1 (2..3)

- Via the membrane keypad
- Via an external keyboard which can be connected via the PS2 input
- Via the computer interface COM2 (*see Manual Part 2,* Command **PS1,PS2,PS3**)

.

Any content, to a maximum of 30 characters in each case, can be stored here. These three strings are inactive at the factory and the lines are not printed out.

The scale ID line is the production number of the scale (given by the manufacturer).

The printout no. is a sequential number which is increased with each printout.

In the case of the weight line, only the line with the gross value (G) or the net value (N) is printed out. In the tare line, only the tare value is printed out.

Prt02 trigger protocol:

	User-defined line 1				
	User-defined line 2				
	User-defined line 3				
	Date		:	**xx.xx.20xx**	
	Time		:	**xx.xx**	
	Device address (ADR)		:	**xx**	
	Scale ID		:	**xxxxxxx**	
	Serial number		:	**xxxxxxx**	
	Printout No.		:	**xxxxxxx**	
	Trigger result	**G**	:	**xxx.xx**	**kg**
or	**Trigger result**	**N**	:	**xxx.xx**	**kg**
(if net)	**Tare**		:	**xxx.xx**	**kg**
	Number of trigger results		:	**xxxxxxx**	
	Mean value		:	**xxxxxxxx**	**kg**
	Standard deviation		:	**xxxxxxxx**	**kg**

Prt03 batching protocol:

	User-defined line 1				
	User-defined line 2				
	User-defined line 3				
	Date		:	**xx.xx.20xx**	
	Time		:	**xx.xx**	
	Device address (ADR)		:	**xx**	
	Scale ID		:	**xxxxxxx**	
	Serial number		:	**xxxxxxx**	
	Printout No.		:	**xxxxxxx**	
	Batching result	**G**	:	**xxx.xx**	**kg**
or	**Batching result**	**N**	:	**xxx.xx**	**kg**
(if net)	**Tare**		:	**xxx.xx**	**kg**
	Number of batching results		:	**xxxxxxx**	
	Mean value		:	**xxxxxxxx**	**kg**
	Standard deviation		:	**xxxxxxxx**	**kg**
	Total		:	**xxxxxxxx**	**kg**

Prt04 batching 2 protocol:

	User-defined line 1				
	User-defined line 2				
	User-defined line 3				
	Date		:	xx.xx.20xx	
	Time		:	xx.xx	
	Device address (ADR)		:	xx	
	Scale ID		:	xxxxxxx	
	Serial number		:	xxxxxxx	
	Printout No.		:	xxxxxxx	
	Batching result	G	:	xxx.xx	kg
or	**Batching result**	N	:	xxx.xx	kg
(if net)	**Tare**		:	xxx.xx	kg
	Number of batching results		:	xxxxxxx	
	Mean value		:	xxx.xx	kg
	Standard deviation		:	xxx.xx	kg
	Total		:	xxx.xx	kg
	Coarse flow cut-off point		:	xxxxxxxx	kg
	Fine flow cut-off point		:	xxxxxxxx	kg
	Batching time		:	x.x	s
	Coarse flow time		:	x.xx	s
	Fine flow time		:	x.xx	s

14 Interface for a second display

An external, second display can be connected to COM port 4 (RS232). The connection of COM4 (9-pin SUB-D) is described in Chapter 5.11 (Page 29)

14.1 Activating COM4 for a second display

Access: Key PAR , COMMUNICATION EXT. DISPLAY (Enter)

COMMUNICATION – EXT. DISPLAY (COM4)			Access level 4
	FUNCTION		OFF* – COM4 disabled Selection of display string String 1 to String 5
	STANDARD DISPLAY[1)]		– none microSYST MIGRA (numerical display) microSYST MIGAN (graphical display)
	PROTOCOL		The DWS2103 has two transmission protocols for the ext. display OFF* = No handshake DTR = Hardware protocol controlled via the DTR signal DC1 = Software protocol controlled with DC1/DC3
	BAUD RATE		The following baud rates can be set: 1.2k, 2.4k, 4.8k, 9.6k*, 19.2k, 38.4k, 57.6k and 115.2k Bd
	PARITY		The following settings can be selected for parity: NONE EVEN ODD
	START STRING LENGTH		0* = No start string 1 to 15 character start string
	Character 1[2)] to character 15		Entry of any ASCII character as decimal value
	END STRING LENGTH		0* = No end string 1 to 5 character end string

Parameter menu COMMUNICATION – EXT. DISPLAY (continued)

	Character 1[3] to character 5		Entry of any ASCII character as decimal value
	CRC		OFF* = No checksum ON = Checksum
	DECIMAL POINT		POINT* = The decimal point is displayed as a point COMMA = The decimal point is displayed as a comma OFF = No decimal point
	PAUSE [10ms]		Time between two display changes, can be set in 10 ms steps up to max. 2.5s
	MEASURED VALUE LENGTH		Number of measured value digits that can be displayed Standard (9 digits) 2 to 9 digits for the measured value

There are 5 selectable telegrams, String 1 to String 5, which can be displayed on an external display. The telegrams have the following contents:

- String 1 Gross or net value + unit max. 19 characters
- String 2 Gross or net value + unit and tare value max. 28 characters
- String 3 Weighing result + unit max. 19 characters
- String 4 Gross or net value max. 9 characters
- String 5 Gross or net value + unit + status max. 17 characters

* Factory settings

1) When connecting and selecting a standard display, the interface COM4 is automatically configured, no further settings are required under EXT. display (COM4). For specifications for the standard displays, please refer to the manufacturer's documentation.

2) A start string consisting of max. 15 characters can be sent before strings 1 to 5. The characters are entered as decimals (e.g. an empty space is input with the value 32 (20hex). The values can be found in an ASCII table. The number of characters entered must not exceed the number set in "Start string length". This menu item is not displayed if the start string length = 0.

3) An end string consisting of max. 5 characters can be sent after strings 1 to 5. The characters are entered as decimals (e.g. an empty space is input with the value 32 (20hex). The values can be found in an ASCII table. The number of characters entered must not exceed the number set in "End string length". This menu item is not displayed if the end string length = 0.

The checksum CRC is a XOR combination of all transmitted characters (first start string character to last end string character).

Detailed description

Char.	**1**	**2**	**3**	**4**	**5**	**6**	**7**	**8**	**9**	**10**	**11**	**12**	**13**	**14**
String1	SN	M1	M1	M1	M1	M1	M1	M1	M1	ES	U	U	U	U
String2	SN	M1	M1	M1	M1	M1	M1	M1	M1	ES	U	U	U	U
String3	SN	W1	W1	W1	W1	W1	W1	W1	W1	ES	U	U	U	U
String4	SN	M1	M1	M1	M1	M1	M1	M1	M1	–	–	–	–	–
String5	SN	M1	M1	M1	M1	M1	M1	M1	M1–	S1	S2	S3	ES	U

Char.	**15**	**16**	**17**	**18**	**19**	**20**	**21**	**22**	**23**	**24**	**25**	**26**	**27**	**28**
String1	ES	GN	GN	GN	GN	–	–	–	–	–	–	–	–	–
String2	ES	GN	GN	GN	GN	SN	T1	T1	T1	T1	T1	T1	T1	T1
String3	ES	GN	GN	GN	GN	–	–	–	–	–	–	–	–	–
String4	–	–	–	–	–	–	–	–	–	–	–	–	–	–
String5	U	U	U	–	–	–	–	–	–	–	–	–	–	–

If no decimal indicator is set (CMD_KC4=0), the characters are offset

SN Sign `'-'` or empty space

M1 Measured value* (7/8 characters)

W1 Weighing result* (7/8 characters)

T1 Tare value* (7/8 characters)

ES Empty space

U Unit (4 characters)

GN Gross/Net display (`'G','NET','N PT'`) at standstill, otherwise empty space (4 characters)

S1 Gross/Net display (`'G','N'`) (1 character)

S2 Standstill display (`'M'`) or empty space (1 character)

S3 Weighing range (`'1','2','3'`) or empty space (1 character)

NOTE

The length of the values M1, W1 and T1 depend on whether a decimal indicator has been set.

15 Limit values

Four limit values can be set in the AED/FIT via the “LIMIT VALUE” menu. Each channel becomes active when the activation value is overrun and inactive when the deactivation value is underrun. The different values give a free choice of hysteresis. The values can be related to the gross, net or trigger result, as desired; this is not dependent on the current display mode.

The parameters for the limit value switches are described in Chapter 8.5.7 (Page 53).

Active limit value channels 1 and 2 are indicated by the symbols (1,2) in the status line of the display.

1	Limit value 1 active, limit value 2 not active or off
12	Limit values 1 and 2 active
2	Limit value 1 not active or off, limit value 2 active
	If this symbol is not displayed, no limit values are active

Limit values 3 and 4 can only be displayed via the “Outputs” setting in the “DISPLAY” menu.

Outputs 3 means that limit value 3 is active.

16 Alibi and calibration memory

The DWS2103 is fitted with an SD card for storing the legal-for-trade parameters. The main print protocol information is stored on the SD card during every printout. The data stored on the SD card is encrypted.

Storage is implemented irrespective of whether it is a legal-for-trade application or if a printer is connected.

The following data are stored during printing (F1 when the symbol ⊙ is displayed):

Print number, date, time, gross, net and tare values, decimal point, unit, measured value status

The SD card is only accessible after the housing has been opened. In legal-for-trade applications, the housing is prevented from being opened by an adhesive label.

16.1 Reading the stored files

The stored data can be displayed via the parameter menu “INFORMATION – WEIGHING RESULT”. The required result can be found and displayed with the arrow keys F2 (↓) or F3 (↑), or by entering the print number.

To search via the print number, the number to be found is entered via the keyboard. Pressing key F4 clears the search text. Start the search with the ↵ key (Enter).

NOTE

The print date and time are only correct if the real-time clock has previously been set.

16.2 SD memory card

The DWS2103 is delivered with an installed memory card with a capacity of 1 GByte.

Maximum SD card memory capacity:		2 GByte
Maximum alibi print data count	for a 1GB SD card:	7.5 million
	for a 2GB SD card:	15 million

NOTE

Error No. 9123

Maximum data count for alibi print data exceeded, SD card is full, no more alibi print data can be stored. Alibi print data **cannot** be deleted!

In legal-for-trade operation, the DWS2103 only works with the SD card inserted by the factory. For the device to start operating again with a new SD card, the hidden pushbutton (secured with the verification seal) must be pressed. Verified mode is left and the legal-for-trade counter is increased by 1.

What to do if the device is faulty:

1. Open the housing
2. Remove the SD card
3. Insert the SD card in the new device
4. Close the housing
5. Switch on the device
6. Press the hidden pushbutton
7. Set the required settings again in the MODE/LFT CAPABILITY menu

In the case of legal-for-trade use, national legal and safety regulations must be complied with.

What to do if the SD card is faulty (legal-for-trade device):

1. Remove the seal
2. Open the housing
3. Replace the faulty SD card with a new card
4. Fix the replaced SD card with an adhesive strip to stop it slipping or being vibrated out
5. Close the housing
6. Switch on the device; the SD card will be initialized with default data.
   (The alibi data and the vehicle data will be lost)
7. Then proceed as described in Chapter 4.1 Initial commissioning, Page 17

After initial commissioning is complete

8. Press the hidden pushbutton and run the CONFIGURATION function in the SCALE CONFIGURATION menu
9. Press the hidden pushbutton again and make the required settings in the MODE/LEGAL-FOR-TRADE CAPABILITY menu

In the case of legal-for-trade use, national legal and safety regulations must be complied with.

NOTE

Once all adjustments and settings have been made, it is advisable to copy the SD card data. Should a card then become faulty, you will still have all the settings and adjustment data on the copied SD card.

17 Parameter factory settings

When the DWS2103 is delivered, it comes with specific factory settings:

- The (7 digit) production number is entered

As the DWS2103 has undergone certain tests during production, the following information may vary from zero:

- Legal-for-trade counter (“SCALE INFORMATION” menu or key F1 with symbol **i**)
- Sensor overflow counter (“BUS SCAN INFORMATION” menu)

Parameters	Default value	Explanation
COM1, baud rate	38400	
COM1, parity bit	even	
COM2,COM3,COM4, function	OFF	switched off
COM2,COM3,COM4,baud rate	9600	
COM2,COM3,COM4, parity bit	even	
Printing, ESC sequences	0	switched off
Basic scale function	Standard	non-automatic weighing instrument
Menu access	5	All menus

When restoring to the factory settings (“DWS2103 FACTORY SETTINGS” menu), the parameters described above are set to their default values.

The DWS2103 has no own measurement signal conditioning. The settings (factory settings) of the active AED/FIT are shown in the menus.

18 Monitoring functions and error messages

18.1 Monitoring functions

The following monitoring functions are implemented for load cell connection:

- Detecting whether a load cell is connected to COM1
- Detecting failure of a load cell
- Sensor input signal exceeds the range –160 %…+160 % of the maximum capacity (NOMINAL VALUE)

There are also other monitoring functions available:

- Short circuit of output voltages OUT1 and OUT2
- Error in parameter storage (SD card)

Error message display:

To indicate an error, [Erxxxx] appears on the display for 3s (xxxx is the error code). The last ten errors can also be read in the parameter menu (“INFORMATION ERROR LIST”).

Error message	Significance	Remedy
Display shows – – – – – – – – –	Measured value is outside the max. display range (depending on the set scale standard)	Reduce the scale loading. Check the set maximum capacity: NOMINAL VALUE parameter in the “SCALE PARAMETER PARAMETERS” menu.
Display shows XXXXXXXXX	Verification error Serial number of LC not identical with verification Legal-for-trade counter status in LC not identical to verification	Load cells were replaced or adjusted. Scale must be verified again.

LC = AED/FIT

18.2 Error messages

The error code is subdivided into different sections:

Error code	Description
Err xxxx	Error message in display
Error group	**(First character)**
1	Bus scan
2	Load cell initialization
3	Load cell parameter check
4	No function
5	Measurement
6	No function
7	Database
8	COM1/2/3/4 interfaces
9	Hardware

BusScan		
Error code	**Description**	**Remedy**
10xx	BusScan error ADRxx, no response (time_out) e.g. 1011 Error at address 11	Check the production number in the configuration menu, then run a bus scan, check the cables, check the load cell interface, check the DWS2103 interface
11xx	BusScan error ADRxx, incorrect response (NAK) e.g. 1011 Error at address 11	

Init_Load cells		
Error code	**Description**	**Remedy**
2000	FMD error	Run bus scan or test load cells (Test menu)
2001	ASF error	
2002	LIV1 error	
2003	LIV2 error	
2004	TAS1 error	
2005	TAV0 error	
2006	MRA0 error	
2007	CWT1000000 error	
2008	MTD0 error	
2009	ENU“d” error	
2010	ZSE0 error	
2011	ZTR0 error	
2012	HSM0 error	
2013	DPT0 error	
2014	NOV1000000 error	
2015	COF8 error	
2016	LIC0,1000000,0,0 error	
2017	CSM2 error	
2018	NTF error	
2019	RSN1 error	
2020	ICR0 error	

Test_Load cells		
Error code	**Description**	**Remedy**
30xx	IDN PART1 error (Manufacturer_code), ADRxx	Reload load cell with parameters (Adjust/Repair menu) or replace load cell
31xx	IDN PART3 error (F number), ADRxx	
32xx	TCR? read error, ADRxx	
33xx	LFT error, ADRxx	
34xx	LDW/LWT error, ADRxx	
35xx	SZA/SFA read error, ADRxx	
36xx	CRC error, ADRxx	
37xx	Type error, ADRxx	
38xx	GCA error, ADRxx	
39xx	GDE error, ADRxx	

Measurement		
Error code	**Description**	**Remedy**
50xx	Load cell with address xx not supplying measured value	Carry out bus scan or test load cell (Test menu), emergency operation possible if only one load cell fails per segment
51xx	Load cell with address xx has incorrect F number	Reload load cell with parameters (Adjust/Repair menu) or replace load cell
52xx	Load cell with address xx has incorrect TRC status	Reload load cell with parameters (Adjust/Repair menu) or replace load cell
5801	Measurement invalid	Print measured value at 0 Print same measured value twice
5802	No standstill	Standstill condition not met during measured value printout

COM1 to 4 interfaces		
Error code	**Description**	**Remedy**
8x01	Input buffer overflow	Run a BUS SCAN
8x02	Overrun Possible causes: Incorrect baud rate, parity settings	
8x03	Parity error Possible causes: Incorrect baud rate, parity settings	Run a BUS SCAN
8x04	Framing error Possible causes: Incorrect baud rate, parity settings	
8x05	Framing error Possible causes: Incorrect baud rate, parity settings	
x represents the interface e.g. 8101 error at COM1, 8201 error at COM2, etc.		

Hardware		
Error code	**Description**	**Remedy**
9100	SD card error	Replace SD card
9123	SD card full, no further alibi print data can be saved.	
9200	EEPROM error	
95xx	ESR error, BIT2 (ADC OVFL), ADRxx	Replace load cell
96xx	ESR error, BIT3 (EEPROM), ADRxx	
97xx	ESR error, BIT4 (bridge excitation voltage), ADRxx	
98xx	ESR error, BIT5 (parameter entry), ADRxx	Test load cell (Test menu)

The battery is only important for the real-time clock function. The device also works without a battery. In this case, the date and time have to be reset after a power failure (see Chapter 8.5.15 (Page 84)).

19 Dimensions

19.1 DWS2103 and panel frame cutout dimensions

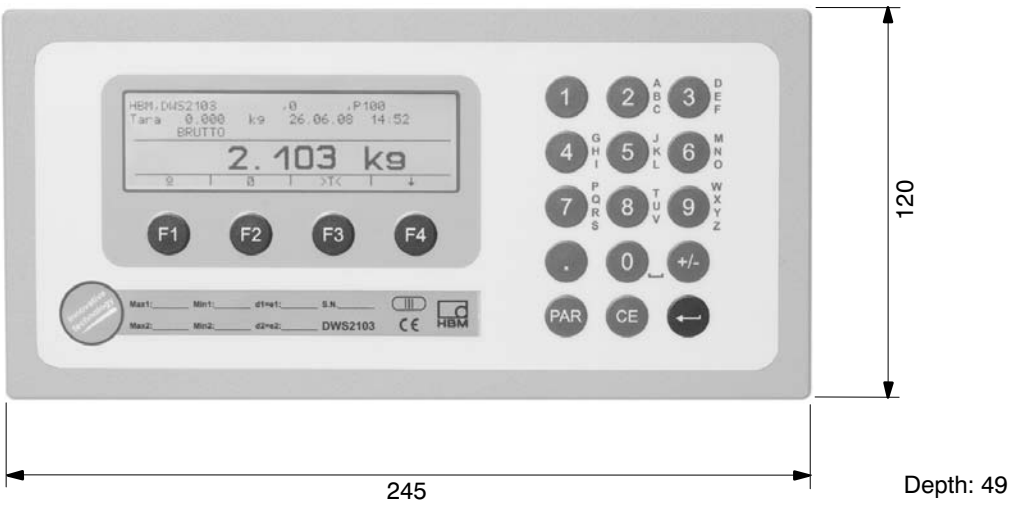

Fig. 19.1: DWS2103 dimensions

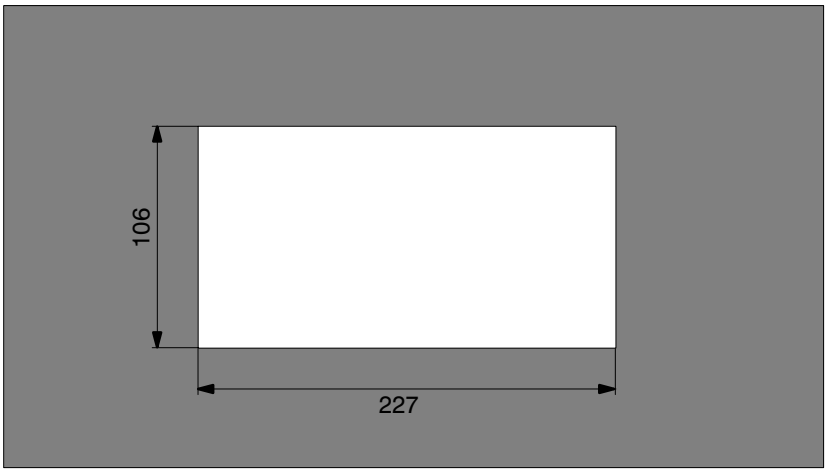

Fig 19.2: Panel frame cutout dimensions

19.2 Desktop housing, also for wall-mounting (1-TG2116)

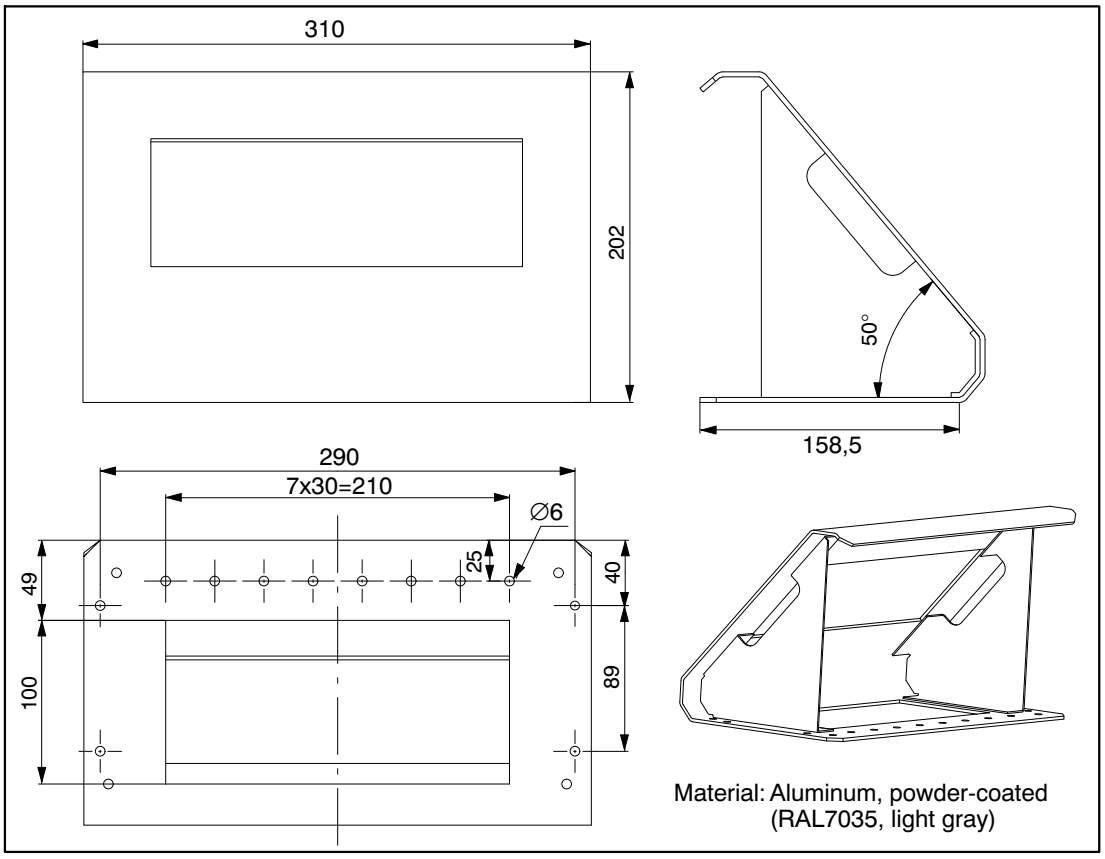

Fig. 19.3: Desktop dimensions, Order no.: 1-TG2116

Hottinger Baldwin Messtechnik GmbH
Im Tiefen See 45 • 64293 Darmstadt • Germany
Tel. +49 6151 803-0 • Fax: +49 6151 803-9100
Email: info@hbm.com • www.hbm.com

measure and predict with confidence

I2935-2.0 en